Tehnical Documentation





THREE - PHASE TEFC INDUCTION MULTI - SPEED CAGE MOTORS

MS09EN

ATB SEVER
Technology in Motion

Vision



We set your ideas in motion. We do not merely manufacture motors, but instead turn the ambitious concepts of our customers into modern, innovative and reliable products, which are unique and point the way to the future. We bring our customers closer to their goals with reliability, creativity and flexibility.

Business Units



Serial Motors



New Businesses



Home Appliances

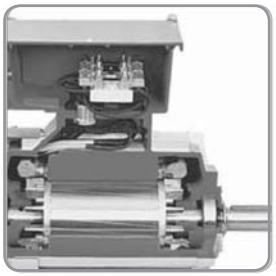

Project Motors

Mechanical protection: IP 55 | TWO SPEED MOTORS | Voltage: 400 V, 50 Hz

Type	Low speed	High speed	Low speed	High speed	Low speed	High speed	Low speed	High speed	Low speed	High speed	J kgm^2	Mass * kg
	P_N kW		n_N min^{-1}		I_N A		I_1/I_N*		T_1/T_N*			
DAHLANDER WINDING Δ/YY											1500/3000 min^{-1}	
1.ZK 71 A - 4/2	0.21	0.28	1400	2800	0.76	0.95	3.6	3.9	2.4	2.5	0.00069	6.1
1.ZK 71 B - 4/2	0.3	0.43	1410	2800	1.2	1.5	3.8	4	2.4	2.3	0.0009	6.9
1.ZK 80 A - 4/2	0.48	0.6	1400	2720	1.4	1.7	3.8	3.8	1.8	1.8	0.0011	8.9
1.ZK 80 B - 4/2	0.7	0.85	1405	2800	2.2	2.3	4.1	4.3	2.2	2.5	0.0014	10
1.ZK 90 S - 4/2	1	1.4	1400	2800	2.9	3.6	4.3	3.5	2	1.9	0.00242	12.5
1.ZK 90 L - 4/2	1.3	1.75	1400	2780	3.1	4	4.6	4.5	2.2	1.7	0.00332	14.5
2.ZK 100 L - 4/2	1.8	2.4	1400	2790	4.1	5.4	4.6	4.7	1.8	1.5	0.00567	18.8
2.ZK 100 Ld - 4/2	2.4	3	1400	2800	5.5	7	5.3	5.3	2.2	2.4	0.00737	22
2.ZK 112 M - 4/2	3	4	1400	2830	6.5	9.5	5.3	5.3	2.2	2.1	0.0104	28.4
1.ZK 132 S - 4/2	4.5	5.7	1440	2830	10	11.9	6.2	6.7	2	2.2	0.019	53.5
1.ZK 132 M - 4/2	6.1	7.5	1450	2860	13	15.2	6.2	6.7	1.8	2.0	0.025	64
1.ZK 160 M - 4/2	9	10.5	1450	2920	19.7	21.5	6.5	7.5	2.4	2.8	0.055	89.5
1.ZK 160 L - 4/2	12	15	1450	2910	25	29	6.6	7.5	2.5	2.9	0.071	118
1.ZK 180 M - 4/2	14	17	1460	2930	29.5	34	7.1	8.2	3.0	3.3	0.086	140
1.ZK 180 L - 4/2	17	20	1460	2940	36	39	7.0	8.8	3.1	3.6	0.1	155
1.ZK 200 L - 4/2	20	23	1465	2938	37	43	6.0	7.2	2.6	3.3	0.28	230
1.ZK 225 S - 4/2	24	28	1480	2960	48	55	7.0	8.5	2.8	3.2	0.38	280
1.ZK 225 M - 4/2	29	34	1480	2960	56	63	6.8	8.6	2.7	3.3	0.46	320
1.ZK 250 M - 4/2	36	45	1485	2965	66	84	7.6	9.2	2.5	3.4	0.7	385
DAHLANDER WINDING Δ/YY											750/1500 min^{-1}	
1.ZK 80 A - 8/4	0.14	0.28	680	1400	1.04	0.9	2	3.4	2	2	0.0011	8.7
1.ZK 80 B - 8/4	0.22	0.37	680	1420	1.4	1.1	2	4.2	1.7	1.9	0.00142	10
1.ZK 90 S - 8/4	0.42	0.8	680	1390	1.9	2.2	2.7	3.5	1.9	1.6	0.00383	12
1.ZK 90 L - 8/4	0.5	1	680	1390	2.2	2.6	3.1	4.2	2.2	1.9	0.00554	14
2.ZK 100 L - 8/4	0.8	1.6	680	1390	3.5	3.9	3.1	4.6	2	1.5	0.00572	18.4
2.ZK 100 Ld - 8/4	1	1.9	680	1400	3.8	4.3	3.6	5.3	2.4	1.7	0.00742	21.6
2.ZK 112 M - 8/4	1.3	2.3	690	1360	4.5	5	3.3	4.4	1.8	1.6	0.0097	26.5
1.ZK 132 S - 8/4	2.2	3.4	700	1400	7	7.3	3.1	4.4	1.1	1.3	0.018	48
1.ZK 132 M - 8/4	2.7	4.3	710	1450	8.4	8.6	3.4	5.4	1.4	1.6	0.0322	65.2
1.ZK 160 Mk - 8/4	4	5.5	715	1440	12	11.3	4.0	6.0	1.8	1.8	0.037	87
1.ZK 160 M - 8/4	4.6	7.3	710	1440	14	14.8	4.2	6.0	1.9	1.8	0.049	90
1.ZK 160 L - 8/4	6.8	11	715	1440	20	21.5	4.0	6.0	2.0	1.7	0.07	120
1.ZK 180 L - 8/4	11	15	715	1460	27	27.5	4.9	7.9	2.0	2.7	0.155	150
1.ZK 200 L - 8/4	15	20	730	1470	38	38	4.9	7.7	1.7	2.1	0.28	230
1.ZK 225 S - 8/4	18	24	730	1470	41.5	47	4.3	6.6	1.4	2.2	0.57	257
1.ZK 225 M - 8/4	22	28	735	1475	47	53	4.6	6.8	1.6	2.2	0.656	306
1.ZK 250 M - 8/4	30	42	740	1475	62	78	5.5	7.8	2.3	2.2	1.02	410
ONE WINDING Δ/YY											1000/1500 min^{-1}	
1.ZK 71 A - 6/4 P	0.15	0.2	900	1410	0.71	0.81	2.6	3.3	1.5	1.4	0.00069	6
1.ZK 71 B - 6/4 P	0.21	0.3	900	1380	0.95	0.95	2.6	3.1	1.4	1.3	0.0009	6.8
1.ZK 80 A - 6/4 P	0.31	0.45	900	1420	1.3	1.5	2.8	3.5	1.6	1.5	0.0011	8.6
1.ZK 80 B - 6/4 P	0.47	0.6	900	1420	1.6	1.8	2.8	4	1.6	1.5	0.00142	9.5
1.ZK 90 S - 6/4 P	0.63	0.9	910	1420	2.1	2.5	3.1	4	1.7	1.5	0.00242	12.5
1.ZK 90 L - 6/4 P	0.9	1.3	920	1420	3	3.6	3.3	4.5	2	1.8	0.00332	14.5
2.ZK 100 L - 6/4 P	1.4	1.9	920	1420	4.4	5.5	4	4.8	2	1.6	0.00567	18.8
2.ZK 100 Ld - 6/4 P	1.7	2.3	930	1420	5.2	6.7	4.2	4.8	2	1.8	0.00737	22
2.ZK 112 M - 6/4 P	2	3	930	1410	5.7	7.2	4.6	6	2.3	1.9	0.0104	28.4
1.ZK 132 S - 6/4 P	3	4.5	950	1440	8.1	10	4.6	6	1.6	1.2	0.019	53.5
1.ZK 132 M - 6/4 P	4.5	5.7	950	1450	11.4	12.4	4.5	6.5	1.7	1.9	0.025	64
1.ZK 160 M - 6/4 P	6	8	940	1450	16	18	4.4	6.7	1.8	2.4	0.049	89.5
1.ZK 160 L - 6/4 P	8	11	950	1445	21	24	4.5	6.8	2	2.6	0.071	118
1.ZK 180 M - 6/4 P	11	16	965	1460	31	40	4.0	6.0	1.9	2.6	0.121	140
1.ZK 180 L - 6/4 P	13	18	965	1465	34	42	4.1	6.2	2	2.7	0.144	155
1.ZK 200 L - 6/4 P	19	24	965	1470	41	47	4.9	7.3	2.4	3.6	0.28	230
1.ZK 225 S - 6/4 P	22	28	975	1475	50	54	4.1	6.7	1.9	2.7	0.38	280
1.ZK 225 M - 6/4 P	27	33	980	1480	60	64	4.5	7.2	2.1	2.7	0.46	320

*) I_1 - Current at braked rotor, T_1 - Torque at braked rotor, Mass - For IM B3

2

Mechanical protection: IP 55

TWO SPEED MOTORS

Voltage: 400 V, 50 Hz

Type	Low speed	High speed	Low speed	High speed	Low speed	High speed	Low speed	High speed	Low speed	High speed	J	Mass *
	P_N kW		n_N min^{-1}		I_N A		I_1/I_N *		T_1/T_N *		kgm^2	kg
TWO SEPARATE WINDINGS Y/Y											1000/1500 min^{-1}	
1.ZK 80 A - 6/4	0.22	0.32	940	1415	0.95	1.1	3	3.8	1.6	1.5	0.0011	8.7
1.ZK 80 B - 6/4	0.26	0.4	940	1440	1.1	1.4	3	4	1.6	1.5	0.00142	10.1
1.ZK 90 S - 6/4	0.45	0.66	940	1440	2.1	1.9	3.2	4.5	1.5	1.5	0.00383	12
1.ZK 90 L - 6/4	0.6	0.9	940	1440	1.8	2.6	3.2	4.5	1.1	1	0.00554	14
2.ZK 100 L - 6/4	0.9	1.3	940	1440	2.7	3.7	3.1	5.2	1.1	1.8	0.00572	18.4
2.ZK 112 M - 6/4	1.2	1.8	940	1440	3.1	4.8	4.2	5.2	2	2	0.0097	26.5
1.ZK 132 S - 6/4	1.7	2.7	960	1440	4.3	6.1	4.8	5.4	1.6	1.6	0.018	48
1.ZK 132 M - 6/4	2.4	3.7	965	1450	5.6	7.6	5.3	6.5	1.8	1.6	0.0322	65.2
1.ZK 160 M - 6/4	3.8	5.7	970	1460	9.4	12	5	5.9	2.2	2.5	0.049	90
1.ZK 160 L - 6/4	5.5	8	970	1460	13.6	16	4.8	6.5	2.4	2.6	0.07	120
1.ZK 180 M - 6/4	7.5	11	970	1465	17.1	22.5	6.0	7.6	2	2.5	0.117	136
1.ZK 180 L - 6/4	9	13	970	1470	20.5	26	6.5	7.5	2.4	2.7	0.144	150
1.ZK 200 L - 6/4	13	19	980	1470	27.5	37	7.3	7.4	2.4	2	0.28	230
1.ZK 225 S - 6/4	19	23	985	1480	48	47	6.4	7.6	2.7	2.6	0.38	280
1.ZK 225 M - 6/4	23	27	985	1480	49	52	6	7	2.4	2.2	0.656	320
1.ZK 250 M - 6/4	27	32	987	1485	59	63	6	7.1	2.1	1.9	0.9	390
ONE WINDING Δ/YY											750/1000 min^{-1}	
1.ZK 80 A - 8/6 P	0.18	0.25	690	950	0.9	1.05	2.6	3.5	1.3	1.8	0.0011	8.7
1.ZK 80 B - 8/6 P	0.22	0.3	690	940	1.3	1.3	2.4	3.4	1.5	2	0.00142	10.1
1.ZK 80 C - 8/6 P	0.3	0.4	690	940	1.4	1.5	2.8	3.6	2	2	0.00244	10.1
1.ZK 90 S - 8/6 P	0.4	0.55	690	930	1.6	1.7	2.8	3.6	1.6	1.7	0.00383	12
1.ZK 90 L - 8/6 P	0.5	0.8	700	940	2.2	2.4	3	3.8	2	2	0.00554	14
2.ZK 100 L - 8/6 P	0.7	1.1	700	940	2.5	2.9	3	3.8	1.6	1.6	0.00572	18.4
2.ZK 100 Ld - 8/6 P	1	1.5	690	920	3.5	4	3.3	3.9	1.9	1.8	0.00742	21.6
2.ZK 112 M - 8/6 P	1.3	1.7	670	930	4.4	4.6	3.4	4.8	1.6	1.8	0.0097	26.5
1.ZK 132 S - 8/6 P	1.7	2.2	720	960	5.6	5.7	3.6	5	1.6	2	0.018	48
1.ZK 132 M - 8/6 P	2.8	3.8	720	960	9	9.5	3.6	5.2	1.6	1.8	0.0322	65.2
1.ZK 160 Mk - 8/6 P	3.5	4.5	710	970	11	12	3.8	5.1	1.6	1.8	0.037	87
1.ZK 160 M - 8/6 P	5	6	710	970	15	16.5	4	5.3	1.5	1.8	0.049	90
1.ZK 160 L - 8/6 P	6.5	9.5	710	960	21	25	4	5.2	1.6	1.8	0.07	120
1.ZK 180 L - 8/6 P	10	13	720	965	27	27	4.2	5.8	1.7	1.8	0.144	150
1.ZK 200 L - 8/6 P	14	18	720	970	37	38	4.6	6	1.7	1.8	0.225	205
1.ZK 225 S - 8/6 P	16.5	20	725	975	45	50	4.7	6	1.8	1.9	0.48	245
1.ZK 225 M - 8/6 P	20	25	725	975	52	60	4.7	6	1.8	1.9	0.56	285
1.ZK 250 M - 8/6 P	27	32	730	980	73	79	4.5	5.8	1.7	2	0.87	370
TWO SEPARATE WINDINGS Y/Y											750/1000 min^{-1}	
1.ZK 90 S - 8/6	0.35	0.45	690	945	1.4	1.6	2.5	3	1.5	1.4	0.00383	12
1.ZK 90 L - 8/6	0.45	0.6	690	945	1.8	2.1	2.3	3	1.4	1.4	0.00554	14
2.ZK 100 L - 8/6	0.6	0.8	680	940	2.3	2.7	3.3	4.2	1.8	1.7	0.00572	18.4
2.ZK 100 Ld - 8/6	0.75	0.9	700	960	2.5	2.8	3.3	4.2	2	1.9	0.00742	21.6
2.ZK 112 M - 8/6	0.9	1.2	700	950	3.2	3.8	3.5	4	2	1.5	0.0097	26.4
1.ZK 132 S - 8/6	1.4	2	710	960	4.3	5.1	3.7	4.3	1.7	1.5	0.019	47.5
1.ZK 132 M - 8/6	2.2	3	715	970	6.4	7.5	4.2	4.8	2	1.6	0.0245	61.5
1.ZK 160 M - 8/6	3.5	5	715	970	10	12	4.5	5.5	1.6	1.6	0.053	91.5
1.ZK 160 L - 8/6	5	7	720	975	15	18.1	4.6	5.8	2	1.9	0.076	122
1.ZK 180 L - 8/6	7	9.5	730	980	19	23	5.4	6.6	2.1	2.6	0.16	160
1.ZK 200 L - 8/6	10	13	730	975	25	27	4.9	5.5	1.5	1.5	0.23	205
1.ZK 225 S - 8/6	13	16	735	980	28	32	5.3	6.3	2	1.7	0.48	245
1.ZK 225 M - 8/6	17	22	735	980	37	45	5.3	5.8	1.9	1.5	0.57	285
1.ZK 250 M - 8/6	22	30	735	985	47	65	6.2	7	2.3	1.9	0.87	370

*) I_1 - Current at braked rotor, T_1 - Torque at braked rotor, Mass - For IM B3

Mechanical protection: IP 55

TWO SPEED MOTORS

Voltage: 400 V, 50 Hz

Type	Low speed	High speed	Low speed	High speed	Low speed	High speed	Low speed	High speed	Low speed	High speed	J	Mass *
	P_N kW		n_N min^{-1}		I_N A		I_1/I_N *		T_1/T_N *		kgm^2	kg
TWO SEPARATE WINDINGS Y/Y												750/3000 min^{-1}
1.ZK 80 A - 8/2	0.09	0.37	670	2800	0.86	1.3	1.3	4.5	1.6	1.8	0.00092	8.1
1.ZK 80 B - 8/2	0.12	0.55	680	2830	0.91	1.8	1.6	4.5	1.4	1.6	0.0011	8.8
1.ZK 90 S - 8/2	0.18	0.75	680	2870	0.81	1.9	2.1	3.8	1.2	1.4	0.00242	12.5
1.ZK 90 L - 8/2	0.25	1.1	680	2830	1.1	2.8	2.5	3.6	1.2	0.8	0.00332	14.5
2.ZK 100 L - 8/2	0.37	1.5	680	2850	1.5	4.2	2.5	4.5	1.4	1.5	0.00567	18.8
2.ZK 100 Ld - 8/2	0.55	1.8	680	2880	2.1	4.3	2.5	5.5	1.5	1.8	0.00737	22
2.ZK 112 M - 8/2	0.75	2.2	700	2900	2.6	5.6	3.2	5.1	2.1	2.1	0.0104	28.4
1.ZK 132 S - 8/2	0.9	3	720	2880	3.1	6.5	3.2	6.2	1.4	1.7	0.019	53.5
1.ZK 132 Mk- 8/2	1.2	4	710	2890	4	8.2	3.2	6.8	1.5	1.6	0.0217	59
1.ZK 132 M - 8/2	1.5	4.8	710	2900	5.3	10.2	3.2	6.8	2	1.6	0.025	64
1.ZK 160 M - 8/2	2.2	6.6	710	2910	7.5	13.7	3	6.4	2.6	3.4	0.055	89.5
1.ZK 160 L - 8/2	3	9.2	720	2925	10.5	17.6	3.5	7.3	2.2	2.7	0.073	118
TWO SPEED MOTORS FAN DRIVE												
DAHLANDER WINDING Y/YY												1500/3000 min^{-1}
1.ZK 71 A - 4/2 V	0.08	0.34	1410	2830	0.39	1.1	3	4	2.4	2.7	0.00043	6
1.ZK 71 B - 4/2 V	0.11	0.5	1430	2830	0.48	1.3	3.8	4	2.7	3	0.00055	6.8
1.ZK 80 A - 4/2 V	0.15	0.7	1430	2850	0.7	1.7	4	4.5	1.9	1.8	0.00075	8.6
1.ZK 80 B - 4/2 V	0.25	0.95	1420	2750	0.92	2	3.2	5.7	1.7	1.7	0.00087	9.5
1.ZK 90 S - 4/2 V	0.33	1.4	1420	2820	1.05	3.4	4	4.6	1.9	2.1	0.00137	13
1.ZK 90 L - 4/2 V	0.5	2	1420	2820	1.4	4.8	4.2	4.8	1.8	2.1	0.00198	15
2.ZK 100 L - 4/2 V	0.65	2.6	1400	2780	1.7	5.9	4.2	4.8	1.5	1.7	0.00331	19
2.ZK 112 M - 4/2 V	1.1	4.5	1440	2820	3	8.8	5.4	7	2.2	2.3	0.0041	24
1.ZK 132 S - 4/2 V	1.45	5.9	1440	2860	3.8	11.4	5.9	7	3	2.5	0.012	56
1.ZK 132 M - 4/2 V	2	8	1440	2870	5	15.2	6.5	7	3	2.7	0.0153	62
1.ZK 160 M - 4/2 V	2.9	11.5	1465	2905	7.4	21.5	6.9	8.7	3.7	3.6	0.028	110
1.ZK 160 L - 4/2 V	3.8	15.5	1465	2890	9.8	29	7.5	9	3.8	3.7	0.035	113
1.ZK 180 M - 4/2 V	5	20	1470	2910	12.6	39	6	8	3	4	0.058	138
1.ZK 180 L - 4/2 V	6	24	1475	2925	14.8	45	6	8.2	2.9	4.4	0.0655	152
1.ZK 200 L - 4/2 V	7.5	30	1480	2945	19	56	6.9	8.2	3.9	4.4	0.14	215
DAHLANDER WINDING Y/YY												750/1500 min^{-1}
1.ZK 71 A - 8/4 V	0.048	0.22	680	1360	0.43	0.68	1.8	3.8	1	1.6	0.00072	6
1.ZK 71 B - 8/4 V	0.07	0.32	680	1380	0.57	0.95	2	3.8	1.9	2.1	0.0009	6.8
1.ZK 80 A - 8/4 V	0.11	0.5	685	1380	0.67	1.3	2	3.4	0.9	1.6	0.0011	8.6
1.ZK 80 B - 8/4 V	0.15	0.7	700	1380	0.95	1.7	2	4	1.2	1.8	0.00142	9.5
1.ZK 90 S - 8/4 V	0.22	1	690	1400	1.06	2.6	2.6	4.1	1.6	1.8	0.00242	12.5
1.ZK 90 L - 8/4 V	0.33	1.3	690	1400	1.5	3.3	3	4.1	1.5	1.6	0.00332	14.5
2.ZK 100 L - 8/4 V	0.5	2	700	1410	1.9	4.9	3	4.6	1.9	1.6	0.00567	18.8
2.ZK 100 Ld - 8/4 V	0.65	2.6	690	1390	2.4	6.3	3	4.6	2	2	0.00737	22
2.ZK 112 M - 8/4 V	0.9	3.6	690	1400	3.04	7.8	3.2	5.6	2	2.1	0.0104	28.4
1.ZK 132 S - 8/4 V	1.1	4.5	690	1420	4.3	10.5	3.2	6.3	2	1.8	0.019	53.5
1.ZK 132 M - 8/4 V	1.4	6.1	720	1450	5.5	13.9	3.4	6.8	2	1.9	0.025	64
1.ZK 160 M - 8/4 V	2.2	9	720	1445	7.5	19.6	3.5	6.5	2.1	3.1	0.055	89.5
1.ZK 160 L - 8/4 V	3	12	715	1445	10.1	25	3.5	6.9	2.2	3.3	0.071	118
1.ZK 180 M - 8/4 V	3.7	16	730	1465	12	33	3.7	6.8	2.1	3.0	0.086	140
1.ZK 180 L - 8/4 V	4.5	19	725	1460	14	38	3.4	6.5	1.9	2.3	0.01	155
1.ZK 200 L - 8/4 V	6	26	735	1460	17	50	4.4	7.4	2.7	3.5	0.28	230
1.ZK 225 S - 8/4 V	8	32	735	1480	25	61	3.9	7.2	2.2	3.2	0.38	280
1.ZK 225 M - 8/4 V	10	37	735	1475	31	71	3.9	7.4	2.6	3.0	0.46	320
1.ZK 250 M - 8/4 V	12	48	740	1485	39	100	4.2	9	1.6	3.4	0.67	385

*) I_1 - Current at braked rotor, T_1 - Torque at braked rotor, Mass - For IM B3

Mechanical protection: IP 55

TWO SPEED MOTORS FAN DRIVE

Voltage: 400 V, 50 Hz

Type	Low speed	High speed	Low speed	High speed	Low speed	High speed	Low speed	High speed	Low speed	High speed	J kgm^2	Masa * kg
	P_N kW		n_N min^{-1}		I_N A		I_1/I_N*		T_1/T_N*			
ONE WINDING Y/YY											1000/1500 min^{-1}	
1.ZK 71 A - 6/4 W	0.09	0.25	920	1400	0.52	0.81	2.1	3.6	0.8	1.6	0.00072	6
1.ZK 71 B - 6/4 W	0.13	0.37	920	1400	0.67	1.1	2.1	3.8	1	2.1	0.0009	6.8
1.ZK 80 A - 6/4 W	0.2	0.55	935	1400	1.1	1.8	2.4	4.1	2	2.5	0.0011	8.6
1.ZK 80 B - 6/4 W	0.27	0.75	910	1400	1.1	1.9	2.5	4.3	2	2.2	0.00142	9.5
1.ZK 90 S - 6/4 W	0.35	1.1	920	1400	1.5	3	2.8	4	1.2	2	0.00242	12.5
1.ZK 90 L - 6/4 W	0.55	1.5	900	1400	2.1	4	2.5	4.7	1.1	2.1	0.00332	14.5
2.ZK 100 L - 6/4 W	0.75	2.2	930	1410	2.4	5.1	3.2	5	1.2	2	0.00567	18.8
2.ZK 100 Ld - 6/4 W	1.1	3	930	1390	3.4	6.5	3.7	5.2	1.4	2.7	0.00737	22
2.ZK 112 M - 6/4 W	1.4	4	950	1400	4.6	9.5	4.2	6.2	1.8	2.7	0.0104	28.4
1.ZK 132 S - 6/4 W	2	5.5	960	1440	5.7	11.4	3.8	6.2	1.1	1.8	0.019	53.5
1.ZK 132 M - 6/4 W	2.7	7.5	960	1440	7.4	15.2	3.8	6	1.1	1.8	0.025	64
1.ZK 160 M - 6/4 W	4	11	950	1425	11.7	24	3.8	6	2	3	0.055	89.5
1.ZK 160 L - 6/4 W	5.5	15	950	1430	16.1	30	3.9	6.1	2	3	0.071	118
1.ZK 180 M - 6/4 W	6.5	18.5	960	1450	19.5	39	4.0	6.5	2	3.1	0.086	140
1.ZK 180 L - 6/4 W	8	22	960	1455	23	48	4.1	6.6	2.1	3.1	0.1	155
1.ZK 200 L - 6/4 W	9.5	27	970	1460	25	55	4.8	7.2	2.4	3.5	0.28	230
1.ZK 225 S - 6/4 W	12	34	975	1475	29	68	5.8	7.3	2.5	2.9	0.38	280
1.ZK 225 M - 6/4 W	14	40	985	1480	39	80	5.9	7.5	2.8	3.1	0.46	320
TWO SEPARATE WINDINGS Y/Y											1000/1500 min^{-1}	
1.ZK 71 A - 6/4 V	0.06	0.18	910	1410	0.33	0.69	2.2	3.2	1.4	1.5	0.00072	6
1.ZK 71 B - 6/4 V	0.09	0.25	930	1420	0.52	0.95	2.3	3.4	1.7	1.8	0.0009	6.8
1.ZK 80 A - 6/4 V	0.15	0.4	900	1400	0.62	1.2	2.3	4.2	1	1.9	0.0011	8.6
1.ZK 80 B - 6/4 V	0.2	0.55	900	1400	0.81	1.6	2.5	4.2	1.1	1.8	0.00142	9.5
1.ZK 90 S - 6/4 V	0.28	0.8	940	1420	1.03	2.4	2.7	4	1.4	1.7	0.00242	12.5
1.ZK 90 L - 6/4 V	0.37	1.1	910	1400	1.4	2.9	2.3	3.6	0.8	1.6	0.00332	14.5
2.ZK 100 L - 6/4 V	0.6	1.7	950	1430	1.9	4.5	3.1	4.7	1.3	1.9	0.00567	18.8
2.ZK 100 Ld - 6/4 V	0.75	2.2	950	1420	2.3	5.2	3.3	4.9	1.6	2	0.00737	22
2.ZK 112 M - 6/4 V	0.9	3	950	1430	2.7	6.7	4.3	6	1.6	2.2	0.0104	28.4
1.ZK 132 S - 6/4 V	1.2	3.6	965	1460	3.3	8	4.3	6.3	1.6	2.2	0.019	53.5
1.ZK 132 M - 6/4 V	1.7	5	965	1450	4.8	11	4.3	6.3	1.6	1.9	0.025	64
1.ZK 160 M - 6/4 V	2.5	7.2	970	1460	7	16	4.3	6.3	3.6	2.8	0.055	89.5
1.ZK 160 L - 6/4 V	3.3	10	970	1462	9	23	4.5	6.9	2.9	3.5	0.071	118
1.ZK 180 M - 6/4 V	5.2	15	970	1460	14.5	31.5	4.4	6	1.7	2.5	0.086	140
1.ZK 180 L - 6/4 V	6.2	18	970	1460	16	37	5	6.5	2	2.5	0.1	155
1.ZK 200 L - 6/4 V	9	25	980	1470	22.5	49	5.2	7.5	2.6	3	0.28	230
1.ZK 225 S - 6/4 V	11	30	985	1480	25	62	6.3	7	2.5	2.4	0.38	280
1.ZK 225 M - 6/4 V	14	37	985	1480	33	75	5.7	7	2.1	2.5	0.46	320
1.ZK 250 M - 6/4 V	17.5	50	985	1480	40	100	5.3	6.8	2.2	2.7	0.67	385

*) I_1 - Current at braked rotor, T_1 - Torque at braked rotor, Mass - For IM B3

Mechanical protection: IP 55

TWO SPEED MOTORS FAN DRIVE

Voltage: 400 V, 50 Hz

Type	Low speed	High speed	Low speed	High speed	Low speed	High speed	Low speed	High speed	Low speed	High speed	J	Masa *
	P_N kW		n_N min^{-1}		I_N A		I_1/I_N *		T_1/T_N *		kgm^2	kg
ONE WINDING Y/YY											750/1000 min^{-1}	
1.ZK 80 A - 8/6 W	0.15	0.3	630	940	0.71	1.5	1.8	3	0.75	1.2	0.0011	8.7
1.ZK 80 B - 8/6 W	0.17	0.4	660	940	0.76	1.9	2.3	3.1	1.2	2.3	0.00142	10
1.ZK 80 C - 8/6 W	0.21	0.5	660	920	0.81	1.7	2.3	3.4	1.1	2	0.00244	10
1.ZK 90 S - 8/6 W	0.3	0.65	680	940	1.2	2.5	2.5	3.4	1.2	2	0.00383	12
1.ZK 90 L - 8/6 W	0.4	0.95	680	920	1.5	2.9	2.3	3.6	1.2	1.9	0.00554	14
2.ZK 100 L - 8/6 W	0.5	1.2	660	920	1.6	3.3	3	4.1	1.3	1.8	0.00572	18.4
2.ZK 100 Ld - 8/6 W	0.7	1.6	640	930	2.7	5.3	2.6	3.7	1.6	2.5	0.00742	21.6
2.ZK 112 M - 8/6 W	0.8	1.9	660	930	2.7	5.3	3.2	4.8	1.1	1.9	0.0097	26.5
1.ZK 132 S - 8/6 W	1.1	2.6	700	960	3.4	7.4	3.2	5.1	1	2	0.018	48
1.ZK 132 Mk - 8/6 W	1.5	3.5	700	960	4.4	9.3	3	4.6	0.8	1.8	0.025	56.5
1.ZK 132 M - 8/6 W	2.1	4.8	700	960	6.4	13.3	3	4.5	1	1.6	0.0322	65.2
1.ZK 160 M - 8/6 W	3	7	700	960	8.7	19	3.3	7.8	1.3	2.3	0.049	90
1.ZK 160 L - 8/6 W	4	10	710	960	11	25	3.4	7.7	1.3	2.3	0.07	120
1.ZK 180 M - 8/6 W	6.5	15	725	960	16	31	3.6	6	1.4	2.4	0.144	150
1.ZK 200 Lk - 8/6 W	7	17	725	970	18	35	3.7	6	1.3	2.2	0.23	205
1.ZK 200 L - 8/6 W	8.5	20	725	970	21	40	3.6	5.8	1.3	2.2	0.28	230
1.ZK 225 S - 8/6 W	11	25	735	980	25	50	4.5	6.4	1.5	2.5	0.57	257
1.ZK 225 M - 8/6 W	13	30	735	980	29	60	4.4	6.2	1.4	2.2	0.656	306
TWO SEPARATE WINDINGS Y/Y											750/1000 min^{-1}	
1.ZK 90 S - 8/6 V	0.24	0.48	700	910	1.04	1.6	2.5	3	1.4	1.2	0.00383	12
1.ZK 90 L - 8/6 V	0.33	0.66	700	940	1.33	2.3	2.5	3	1.4	1.3	0.00554	14
2.ZK 100 L - 8/6 V	0.45	0.9	700	940	1.5	2.47	3	4.3	1.3	1.5	0.00572	18.4
2.ZK 100 Ld - 8/6 V	0.6	1.2	700	940	2	3.2	3	4.4	1.4	2	0.00742	21.6
2.ZK 112 M - 8/6 V	0.8	1.6	700	940	3.1	5	3.3	4.3	1.7	2	0.0097	26.5
1.ZK 132 S - 8/6 V	1.1	2.2	710	950	3.2	5.4	3.5	4	1.2	1.2	0.018	48
1.ZK 132 Mk - 8/6 V	1.5	3	710	950	4.2	7	3.5	4	1.6	1.4	0.025	56.5
1.ZK 132 M - 8/6 V	1.8	3.5	710	950	5.3	8.6	3.5	4	1.6	1.4	0.0322	65.2
1.ZK 160 M - 8/6 V	2.6	5.5	720	960	7.5	13.7	4.5	5.2	1.6	1.6	0.049	90
1.ZK 160 L - 8/6 V	3.8	7.5	720	960	10.5	18.2	4.8	5.7	1.6	1.6	0.07	120
1.ZK 180 M - 8/6 V	5	10	720	970	14	25	4.5	6.5	2.8	2.1	0.144	150
1.ZK 200 Lk - 8/6 V	6.5	13	730	975	17.5	30	4.6	5.9	1.7	1.8	0.23	205
1.ZK 200 L - 8/6 V	8	16	735	975	21	34	5.5	6	1.8	1.7	0.28	230

*) I_1 - Current at braked rotor, T_1 - Torque at braked rotor, Mass - For IM B3

6

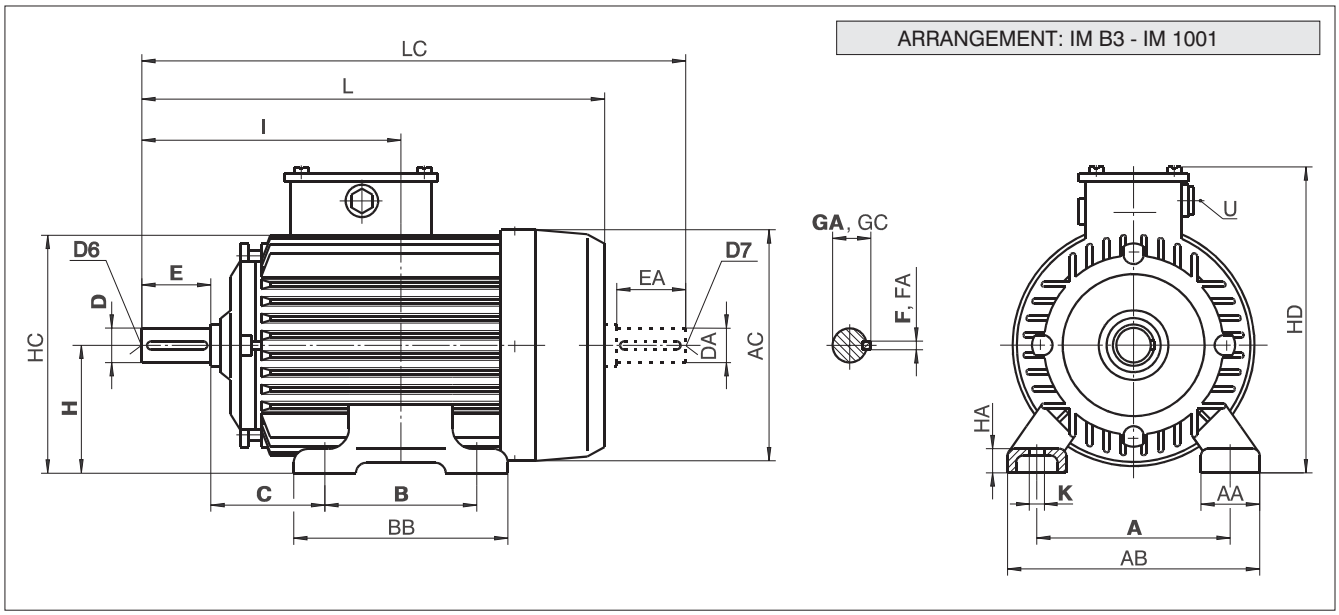

Type	Pole	A	AA	AB	AC	B	BB	C	D	DA	DB	DC	E	EA	F	FA	GA	GC	H	HA	HC	HD	I	K	L	LC	U
1.ZK 71	2 ... 8	112	34	142	140	90	114	45	14	11	M5	M4	30	23	5	4	16	12.5	71	8	142	173	120	7	241	267	AU 13.5
1.ZK 80	2 ... 8	125	37.7	155	154	100	130	50	19	14	M6	M5	40	30	6	5	21.5	16	80	9	158	190	140	10	274	307	AU 13.5
1.ZK 90 S	2 ... 8	140	40	180	170	100	130	56	24	24	M8	M8	50	50	8	8	27	27	90	12	177	203	156	10	307	360	AU 13.5
1.ZK 90 L						125	155																168.5		332	385	

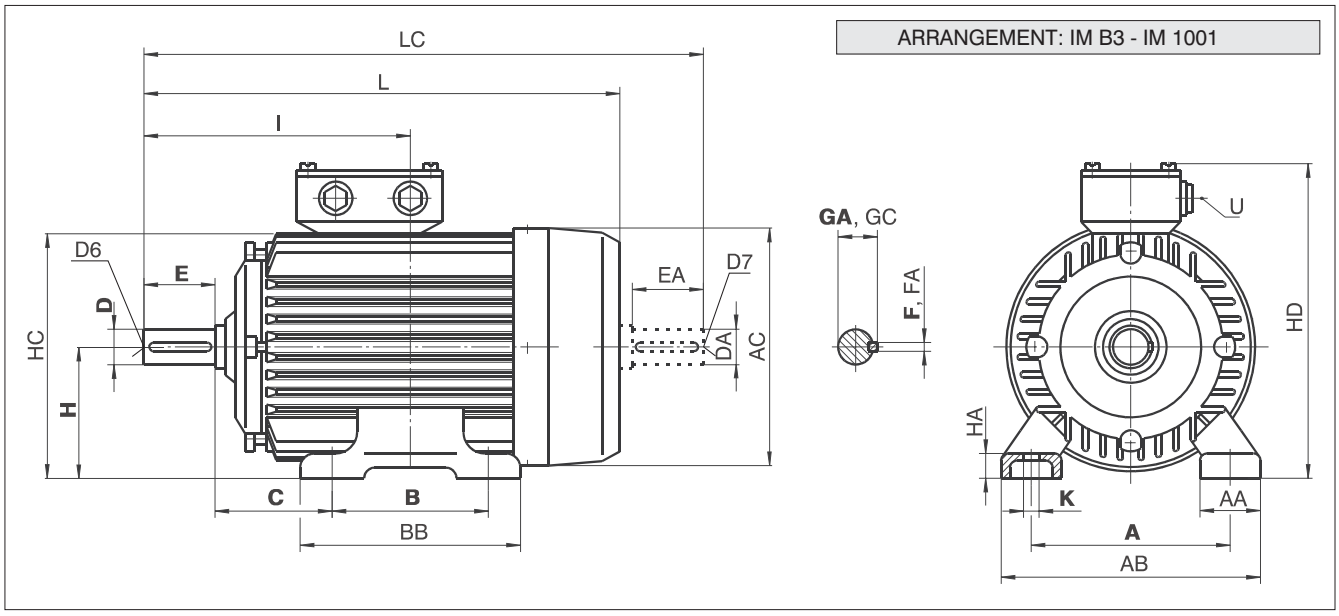

Type	Pole	A	AA	AB	AC	B	BB	C	D	DA	DB	DC	E	EA	F	FA	GA	GC	H	HA	HC	HD	I	K	L	LC	U
2.ZK 100 L	2 ... 8	160	44	204	193	140	175	63	28	28	M10	M10	60	60	8	8	31	31	100	14	194	257	193	12	370	438	AU 16
2.ZK 100 Ld	4; 8																										
2.ZK 112 M	2 ... 8	190	46	236	216	140	175	70	28	28	M10	M10	60	60	8	8	31	31	112	15	218	281	200	12	380	445	AU 16

The dimensions given in bold figures are obligatory according to the recommendation of IEC. All other technical data and dimensions during the future development of motors may undergo some changes and therefore they can be considered as obligatory after our confirmation only. All dimensions are given in millimetres.

ARRANGEMENT: IM B5, V1 - IM 3001, 3011

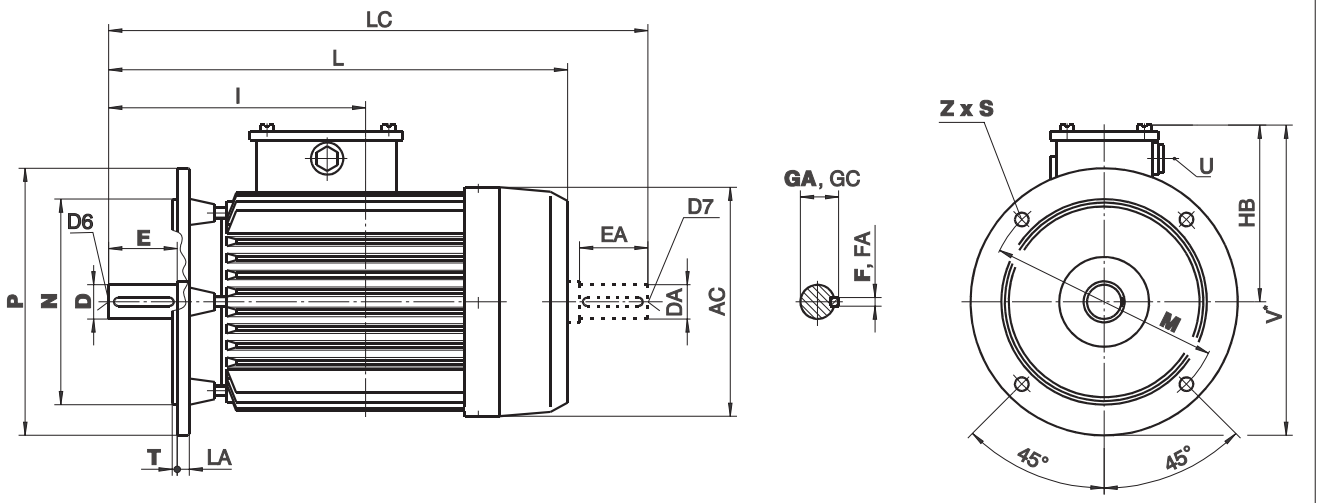

Type	Pole	Flange	AC	D	DA	DB	DC	E	EA	F	FA	GA	GC	HB	I	L	LA	LC	M	N	P	S	Z	T	V	U
1.ZK 71	2 ... 8	FF 130	140	14	11	M5	M4	30	23	5	4	16	12.5	105	120	241	10	267	130	110	160	Ø10	4	3.5	185	AU 13.5
1.ZK 80	2 ... 8	FF 165	154	19	14	M6	M5	40	30	6	5	21.5	16	110	140	274	12	307	165	130	200	Ø12	4	3.5	210	AU 13.5
1.ZK 90 S	2 ... 8	FF 165	170	24	24	M8	M8	50	50	8	8	27	27	121	156	307	12	360	165	130	200	Ø12	4	3.5	221	AU 13.5
1.ZK 90 L															168.5	332		385								

ARRANGEMENT: IM B5, V1 - IM 3001, 3011

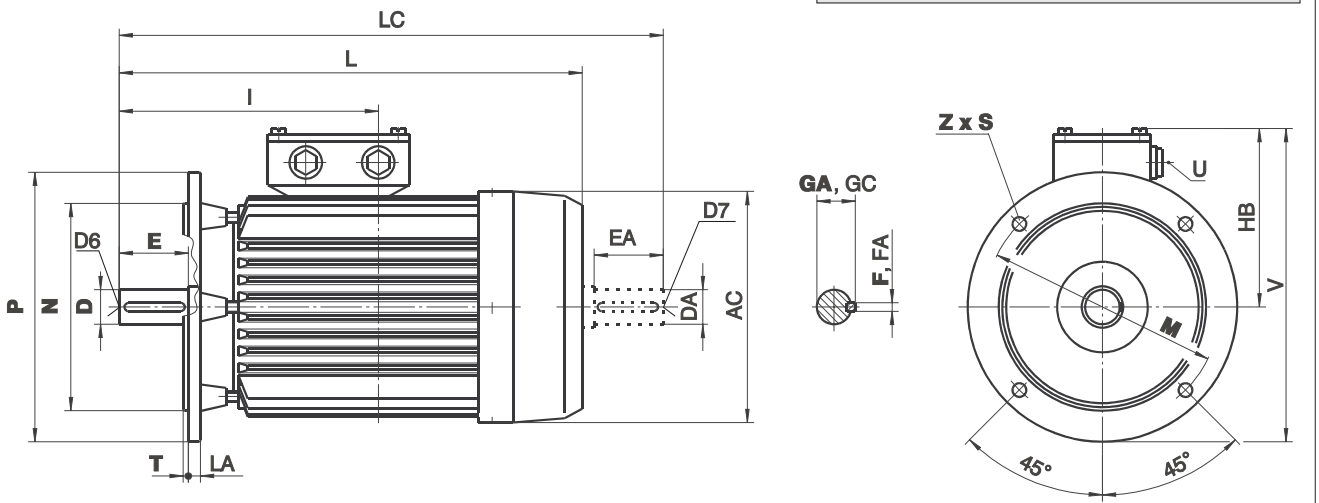

Type	Pole	Flange	AC	D	DA	DB	DC	E	EA	F	FA	GA	GC	HB	I	L	LA	LC	M	N	P	S	Z	T	V	U
2.ZK 100 L	2 ... 8	FF 215	193	28	28	M10	M10	60	60	8	8	31	31	157	193	370	15	438	215	180	250	Ø15	4	4	282	AU 16
2.ZK 100 Ld	2; 8																									
2.ZK 112 M	2; 8	FF 215	216	28	28	M10	M10	60	60	8	8	31	31	169	200	380	16	445	215	180	250	Ø15	4	4	294	AU 16

The dimensions given in bold figures are obligatory according to the recommendation of IEC. All other technical data and dimensions during the future development of motors may undergo some changes and therefore they can be considered as obligatory after our confirmation only. All dimensions are given in millimetres.

ARRANGEMENT: IM B14 - IM 3601

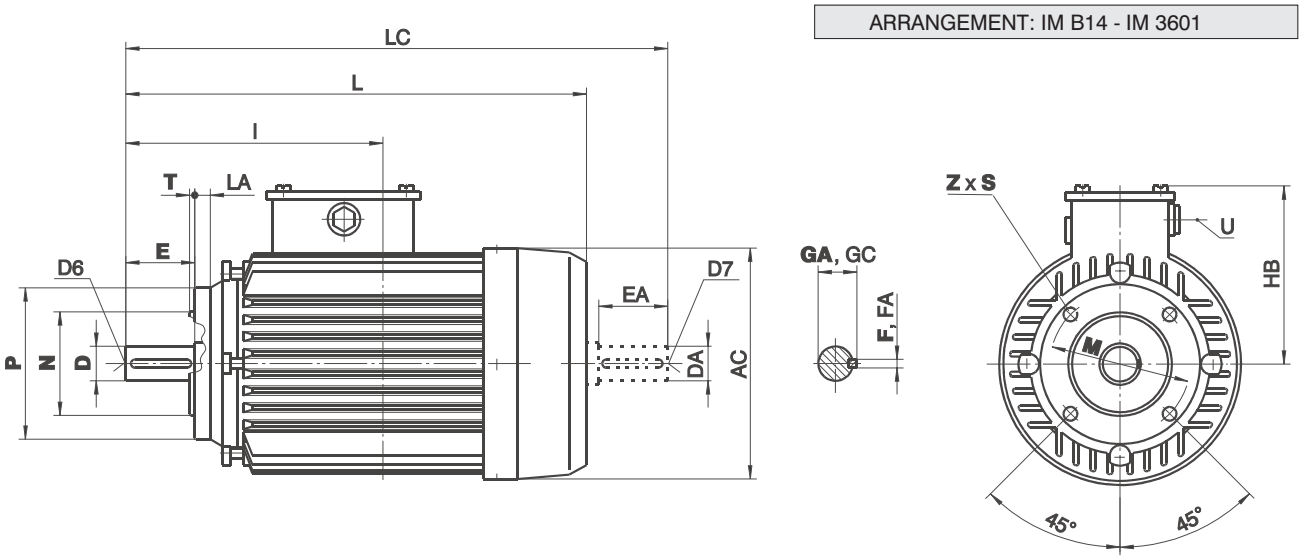

Type	Pole	Flange	AC	D	DA	DB	DC	E	EA	F	FA	GA	GC	HB	I	L	LA	LC	M	N	P	S	Z	T	U
1.ZK 71	2 ... 8	FT 85	140	14	11	M5	M4	30	23	5	4	16	12.5	105	120	241	8	267	85	70	105	M6	4	2.5	AU 13.5
		FT 115															10		115	95	140	M8	4	3	
1.ZK 80	2 ... 8	FT 100	154	19	14	M6	M5	40	30	6	5	21.5	16	110	140	274	10	307	100	80	120	M6	4	3	AU 13.5
		FT 130															12		130	110	160	M8	4	3.5	
1.ZK 90 S	2 ... 8	FT 115	170	24	24	M8	M8	50	50	8	8	27	27	121	156	307	10	360	115	95	140	M8	4	3.5	AU 13.5
		FT 130																	130	110	160			3.5	
1.ZK 90 L	2 ... 8	FT 115													168.5	332		385	115	95	140			3.5	
		FT 130																	130	110	160			3.5	

ARRANGEMENT: IM B14 - IM 3601

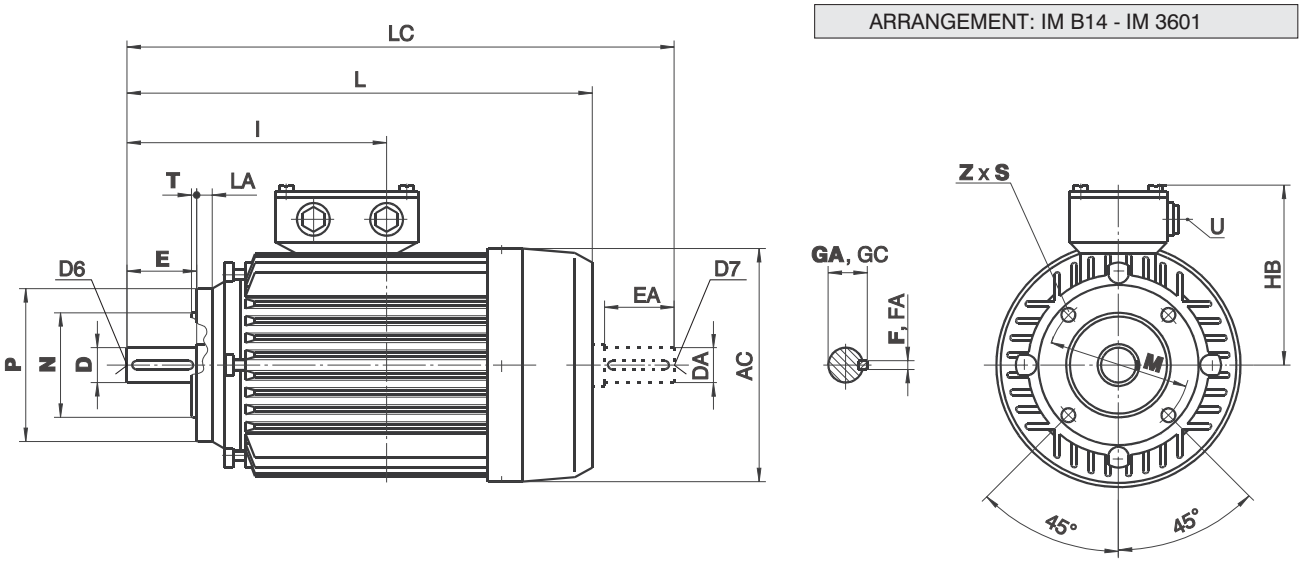

Type	Pole	Flange	AC	D	DA	DB	DC	E	EA	F	FA	GA	GC	HB	I	L	LA	LC	M	N	P	S	Z	T	U
2.ZK 100 L	2 ... 8	FT 130	193	28	28	M10	M10	60	60	8	8	31	31	157	193	370	10	438	130	110	160	M8	4	3.5	AU 16
		FT 165															12		165	130	200	M10	4		
2.ZK 100 Ld	4.8	FT 130															10		130	110	160	M8	4		
		FT 165															12		165	130	200	M10	4		
2.ZK 112 M	2 ... 8	FT 130	216	28	28	M10	M10	60	60	8	8	31	31	169	200	380	10	445	130	110	160	M8	4	3.5	AU 16
		FT 165															12		165	130	200	M10	4		

The dimensions given in bold figures are obligatory according to the recommendation of IEC. All other technical data and dimensions during the future development of motors may undergo some changes and therefore they can be considered as obligatory after our confirmation only. All dimensions are given in millimetres.

ARRANGEMENT: IM B3 - IM 1001

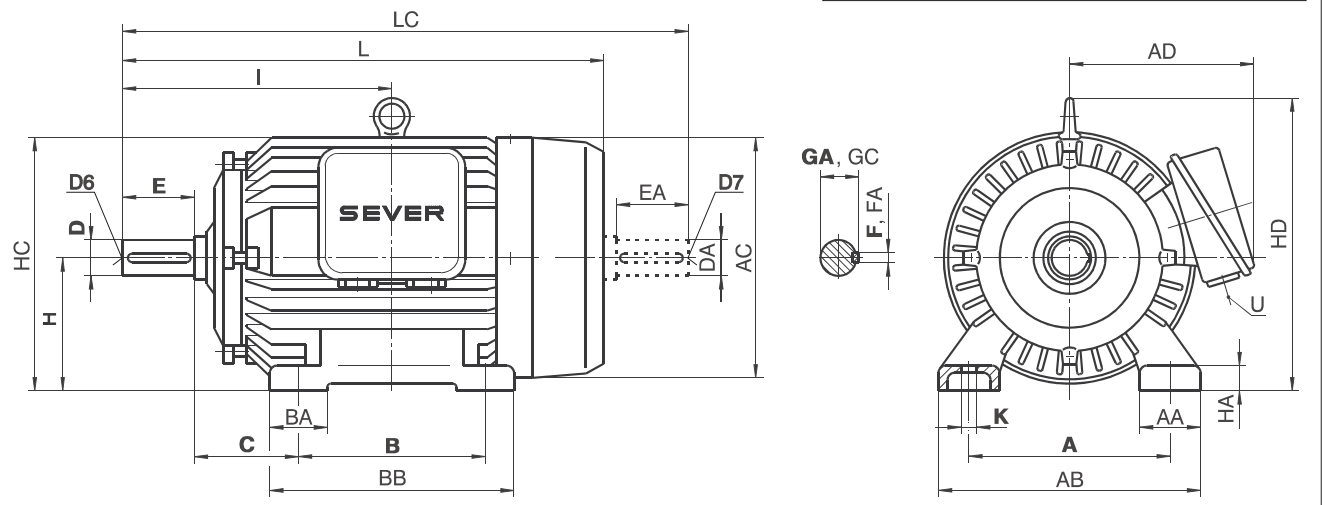

Type		Pole	A	AA	AB	AC	AD	B	BA	BB	C	D	DA	DB	DC	E	EA	F	FA	GA	GC	H	HA	HC	HD	I	K	L	LC	U
1.ZK 132	Sk	2	216	55	271	247	190	140	50	180	89	38	38	M12	M12	80	80	10	10	41	41	132	20	255	291	239	12	441	529	AU 21
	S	2 ... 8																												
	Mk	6						178		218																258		479	567	
	M	4; 8																												
1.ZK 160	M	2 ... 8	254	60	314	285	246	210	65	260	108	42	42	M16	M16	110	110	12	12	45	45	160	23	300.5	345	323	15	589	709	AU 29
	L	2 ... 8						254		304																345		633	753	
1.ZK 180	M	2; 4	279	70	349	323	260	241	75	296	121	48	48	M16	M16	110	110	14	14	51.5	51.5	180	28	342	387	351.5	15	652	772	AU 29
	L	4; 6; 8						279		334																370.5		690	810	
1.ZK 200	Lk	2 ... 8	318	80	398	369	299	305	95	375	133	55	55	M20	M20	110	110	16	16	59	59	200	30	387.5	440	395.5	19	756	876	AU 36
	L																													
1.ZK 225	S	4; 8	356	90	446	418	337	286	110	355	149	60	60	M20	M20	140	140	18	18	64	64	225	35	438	500	432	19	805	962	AU 36
	M	2						311		380		55	55			110	110	16	16	59	59					414.5		800	927	
		4; 6; 8										60	60			140	140	18	18	64	64					444.5		830	987	
1.ZK 250	M	2	406	96	506	474	360	349	95	430	168	60	60	M20	M20	140	140	18	18	64	64	250	40	487.5	549	482.5	24	906	1060	AU 36
		4; 6; 8										65	65							69	69									

The dimensions given in bold figures are obligatory according to the recommendation of IEC. All other technical data and dimensions during the future development of motors may undergo some changes and therefore they can be considered as obligatory after our confirmation only. All dimensions are given in millimetres.

ARRANGEMENT: IM B5, V1 - IM 3001, 3011

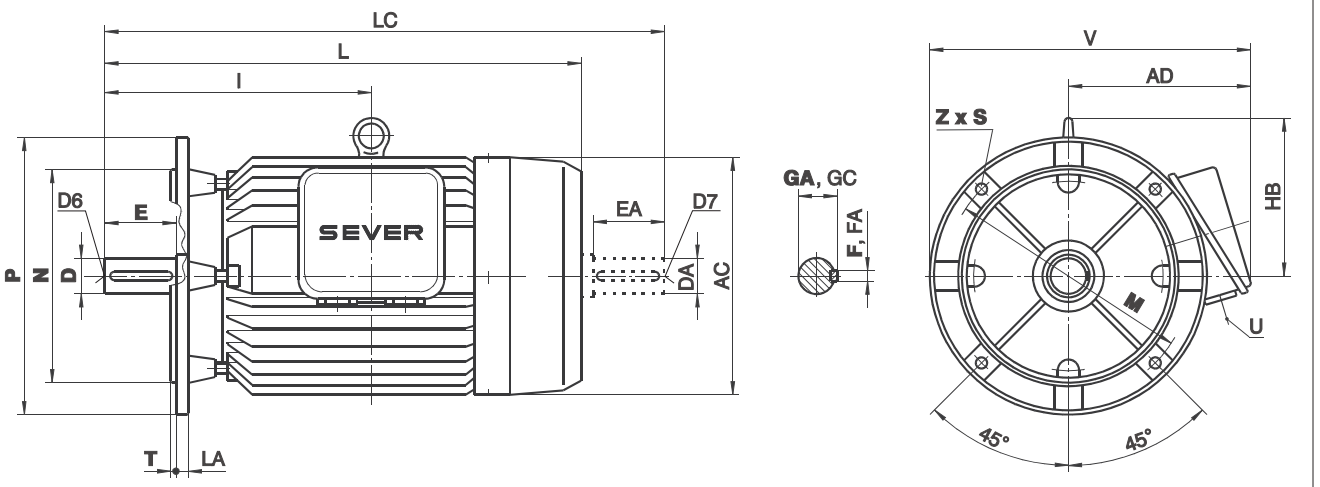

Type		Pole	Flange	AC	AD	D	DA	DB	DC	E	EA	F	FA	GA	GC	HB	I	L	LA	LC	M	N	P	S	Z	T	V	U
1.ZK 132	Sk	2	FF 265	247	190	38	38	M12	M12	80	80	10	10	41	41	159	239	441	16	529	265	230	300	Ø15	4	4	340	AU 21
	S	2 ... 8																										
	Mk	6															258	479		567								
	M	4; 8																										
1.ZK 160	Mk	2 ... 8	FF 300	285	246	42	42	M16	M16	110	110	12	12	45	45	185	323	589	20	709	300	250	350	Ø19	4	4	421	AU 29
	M	2; 8																										
	L	2 ... 8															345	633		753								
1.ZK 180	M	2; 4	FF 300	323	260	48	48	M16	M16	110	110	14	14	51.5	51.5	207	351.5	652	20	772	300	250	350	Ø19	4	5	435	AU 29
	L	4; 6; 8															370.5	690		810								
1.ZK 200	L	2 ... 8	FF 350	369	299	55	55	M20	M20	110	110	16	16	59	59	240	395.5	758	20	876	350	300	400	Ø19	4	5	499	AU 36
1.ZK 225	S	4; 8	FF 400	418	337	60	60	M20	M20	140	140	18	18	64	64	275	432	805	20	962	400	350	450	Ø19	8	5	537	AU 36
	M	2				55	55			110	110	16	16	59	59		414.5	800		927								
		4; 6; 8				60	60			140	140	18	18	64	64		444.5	830		987								
1.ZK 250	M	2	FF 500	474	360	60	60	M20	M20	140	140	18	18	64	64	299	482.5	906	22	1060	500	450	550	Ø19	8	5	635	AU 36
		4; 6; 8				65	65							69	69													

The dimensions given in bold figures are obligatory according to the recommendation of IEC. All other technical data and dimensions during the future development of motors may undergo some changes and therefore they can be considered as obligatory after our confirmation only. All dimensions are given in millimetres.

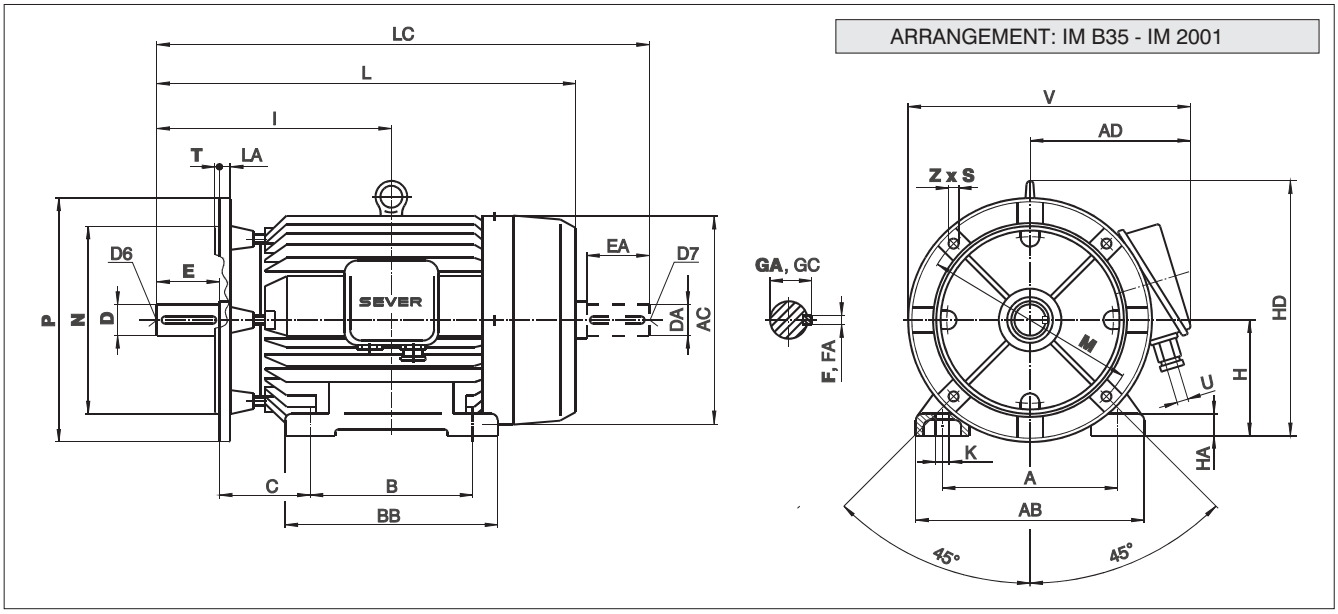

Type	Pole	Flange	A	AB	AD	B	BB	C	D	DA	DB	DC	E	EA	F	FA	GA	GC	H	HA	HD	I	K	L	LA	LC	M	N	P	S	Z	T	V	U
1.ZK 132 Sk	2	FF 265	216	271	190	140	180	89	38	38	M12	M12	80	80	10	10	41	41	132	20	291	239	12	441	16	529	265	230	300	Ø15	4	4	340	AU 21
1.ZK 132 S	2 ... 8																																	
1.ZK 132 Mk	6					178	218															258		479		567								
1.ZK 132 M	4 ... 8																																	
1.ZK 160 Mk	2 ... 8	FF 300	254	314	246	210	260	108	42	42	M16	M16	110	110	12	12	45	45	160	23	345	323	15	589	20	709	300	250	350	Ø19	4	4	421	AU 29
1.ZK 160 M						254	304															345		633		753								
1.ZK 160 L																																		
1.ZK 180 M	2; 4	FF 300	279	349	260	241	296	121	48	48	M16	M16	110	110	14	14	51.5	51.5	180	28	387	351.5	15	652	20	772	300	250	350	Ø19	4	5	435	AU 29
1.ZK 180 L	4 ... 8					279	334															370.5		690		810								
1.ZK 200 Lk	2; 6	FF 350	318	398	299	305	375	133	55	55	M20	M20	110	110	16	16	59	59	200	30	440	395.5	18	758	20	876	350	300	400	Ø19	4	5	499	AU 36
1.ZK 200 L	4 ... 8																																	
1.ZK 225 S	4; 8	FF 400	356	446	337	286	355	149	60	60	M20	M20	140	140	18	18	64	64	225	35	500	432	18	805	20	962	400	350	450	Ø19	4	5	537	AU 36
1.ZK 225 M	2					311	380		55	55			110	110	16	16	59	59				414.5		800		927								
	4 ... 8								60	60			140	140	18	18	64	64				444.5		830		987								
1.ZK 250 M	2	FF 500	406	506	360	349	430	168	60	60	M20	M20	140	140	18	18	64	64	250	40	549	482.5	24	906	22	1060	500	450	550	Ø19	4	5	635	AU 36
	4 ... 8								65	65							69	69																

The dimensions given in bold figures are obligatory according to the recommendation of IEC. All other technical data and dimensions during the future development of motors may undergo some changes and therefore they can be considered as obligatory after our confirmation only. All dimensions are given in millimetres.

STANDARDS

Our three - phase TEFC induction multi - speed cage motors satisfy the following standards:

- IEC 60034-1 - Rating and performances;
- IEC 60034-2 - Methods of determining efficiency;
- IEC 60034-5 - Degree of mechanical protection;
- IEC 60034-6 - Methods of cooling;
- IEC 60034-7 CODE II - Mounting arrangements;
- IEC 60034-8 - Terminal markings;
- IEC 60034-11 - Built - in thermal protection;
- IEC 60034-14 - Mechanical vibrations, limit values;
- IEC 60038 - Standard voltage;
- IEC 60072-1 - Mounting dimensions;
- IEC 60085 - Insulation material classification.

Our motors carry CE mark as a sign of a product conformity to the requirements of all applicably directives of European Union, especially concerning safety, life and health protection, environment protection and consumer protection:

- Low Voltage Directive 73/23/EEC, modified by 93/68/EEC;
- Electromagnetic compatibility Directive 89/336/EEC modified by 92/31 EEC
- Machinery Directive 89/392/EEC modified by 91/368/EEC, 93/44/EEC and 93/687EEC.

Quality assurance system of SEVER motor factories is certified according to the international standard ISO9001.

VOLTAGE AND FREQUENCY

The motors are produced for the rated supply voltage 3 x 400 V ±10%, 50Hz. This means that on a special request of the standards this motor can operate at supply voltages:

- 220/380 V ± 5%,
- 230/400 V ±10%,
- 240/415 V ± 5%.

Winding connections are: for motor with one winding D / YY and Y / YY, for motors with two separated windings Y / Y. On a special request the motors can be executed also for other voltages and winding connections unto 690 V.

These motors can operate at frequency of 60 Hz as well with suitable changes of electrical parameters.

OUTPUT

The rated motor powers given in the performance data tables refer to continuous running duty. According to that the motors must be connected to the network of rated voltage and frequency, and the ambient temperature must not exceed 40°C. Motors for special operating conditions: temperature above 40°C, altitude above 1000 m, frequent starting or starting heavy flywheel masses are available on a special enquiry.

MECHANICAL DESIGN AND MOUNTING ARRANGEMENTS

Some parts of the motor and the basic materials used in design are shown in the following table:

Motor parts	Frame size (shaft height)										
	71	80	90	100	112	132	160	180	200	225	250
Stator frame	Silumine					Cast iron					
End shield B3	Silumine					Cast iron					
End shield B5	Cast iron										
End shield B14	Cast iron					Not available					
Feet	Cast on		Bolted				Cast on [1]				
Fan cover	Steel										Silumine
Fan	Polypropylene									Silumine	

The motors are designed for three basic mounting arrangements: IM B3 (IM 1001), IM B5 (IM 3001) and IM B14 (IM 3601) - only up to frame size 112. All mounting arrangements are in accordance with the IEC 60034-7.

SPEED

Multi - speed motors given in the performance data tables are produced for the following speed ratios: 4/2, 8/4, 6/4, 8/6 and 8/2. In the performance data tables the speed of the motors is given for rated voltage, frequency and load.

MECHANICAL PROTECTION

Mechanical protection of the motor is IP55 according to the IEC 60034-5. Protection of terminal box is IP55 by which is disabled penetration of water jet.

TOLERANCES

All mechanical dimension of electric motors and their tolerances are in accordance with the IEC 60072-1 and are shown in the following table:

Term	Design.	Dimension , mm	Tolerance
Shaft diameter	D, DA	≤ 28 > 28 > 50	i6 k6 m6
Flange spigot diameter	N	< 450 > 450	i6 h6
Flange pitch diameter	M	≤ 200 > 200 > 500	± 0.25 mm ± 0.50 mm ± 1.00 mm
Foot fixing dimension	A, B	≤ > 250 > 500	0.75 mm ± 1.00 mm ± 1.50 mm
Shaft height	H	≤ 250 > 250	− 0.50 mm − 1.00 mm

All electrical tolerances for rated values of the motor are in accordance with IEC 60034-1 and are shown in the following table:

Tolerance	Design.	Dimension, kW	Tolerance , %
Efficiency	η	$P_N \leq 50$	- 0.15 (1-η)
Power factor	cosφ		$-\frac{1-\cos\varphi}{6}$, Min 0.02, Max 0.07
Slip	s	$P_N < 1$ $P_N \geq 1$	± 30 ± 20
Locked rotor current	I_1		+ 20
Locked rotor torque	T_1		− 15 + 25
Breakdown torque	T_b		− 10
Moment of inertia	J		± 10

BEARINGS

Technical solution for bearing arrangement provides quiet and long - term motor operation. The bearing performances and dimensions can be shown in Table 1, page 14.

LUBRICATION

The bearings for motor up to frame size 160 are lubricated for life and regreasing is not possible. With frame size 180-225 the bearings are lubricated by the motor manufacturer and cannot be relubricated without disassembling the motor end shields as it is indicated in Table 1, page 14. All data in the table refer to the ambient temperature up to 40 °C.

Standard used greases are lithium based.

COOLING

The motors are surface cooled with their own fan, which is protected with special cover. All the motor up to frame size 200 have fans made of polypropylene. For all other frame size fans are made of aluminum alloy.

WINDING INSULATION

The motor windings are designed with insulation in class “F”. This system of insulation is suitable for temperature rise limit of 105 K above ambient temperature of 40 °C. Motor heating satisfies insulation in class “B” (80 K).

BALANCING AND VIBRATIONS

The rotors are balanced dynamically with half key on the drive shaft end, in quality which is in accordance with the requirements of the IEC 60034, part 14.

The limits of vibration severity are shown in the following table:

Grade	Limits of vibration severity in mms^{-1} (effective) for frame size H in mm			
	Speed range min^{-1}	Free suspension		
		71 <H≤132	132 <H≤225	255 <H≤400
N	600≤n≤3600	1.80	2.80	3.50
R	600≤n≤1800	0.71	1.12	1.80
	1800<n≤3600	1.12	1.80	2.80
S	600≤n≤1800	0.45	0.71	1.12
	1800<n≤3600	0.71	1.12	1.80

The motor with lower vibration severity grade “R” or “S” (special) are available on a special request.

TERMINAL BOX

Motors up to frame size 112 are designed with terminal box on the top. From frame size 132 to 315 (1.ZK) the motors are designed with right hand side terminal box, and left hand side position is available on request. Terminal markings are in accordance with the IEC 60034 - 8. The main terminal box data are shown in table 2, page 14. Way of connecting is shown on the drawings of connection located in the terminal boxes.

OVERLOAD CAPACTIY

According to provisions of the JUS IEC 60034-1 motors can be overloaded, meaning that motors heated to on operating temperature can withstand current equal to 1.5 times the rated current for not less than 2 minutes. The same way, they can be overloaded by the torque 1.6 times the rated one for 15 seconds without stalling or abrupt in speed.

ROTOR AND SHAFT EXTENSION

The rotors are cage type, normally designed with one cylindrical shaft extension. On special request they can be designed also with two fee shaft extensions, with taper shaft extension and other special shaft extensions. The dimensions of free shaft extensions are in conformity with the recommendations of the publication IEC 60072 - 1, fifth edition. The central box of the shaft extension is given on dimension drawings. In order to keep load of bearings and of shaft extension within the allowed limits, there must be paid attention to the radial and axial forces and to the type of transmission from a motor to a working machine.

THERMAL PROTECTION

On a special request stator winding of the motor can be protected from overheating by embedding PTC thermistors according to the IEC 0034-11. In each phase of winding there is embedded one PTC themistor for switch - off temperature 150°C. In the motor with one winding D / YY there are built in three themistors and in the motor with two separate windings Y/Y six thermistors are used. All the three and six thermistors are connected in series and two ends of such connection are lead out in the terminal box. These two ends have to be connected to control unit, which can be delivered with motor. Besides, the motors can be equipped with additional thermistors for alarm.

HEATERS

On special request the motors can be equipped with heaters as a protection against condensed water. They could be exposed to danger of water condensation due to sudden and large changes of temperature during the motor stand still. During the motor operation the heaters must be switched off. The supply voltage and power of heating elements, which are fixed to the winding head are shown in the following table:

Frame size H, mm	Supply voltage V	Heater 's power P_g, W
71-80	115 or 230	8
90-112		25
132-160		40
180-250		80

FINISH PAINTING

Standard finish painting of the motors is performed by protective alkyd paint RAL 7001. For special climate conditions according to the IEC 60071-2-1 painting is performed by epoxy paint.

PACKING

The motors of frame size 63 up to 132 are packed normally in cardboard boxes, while the motors of frame size 160 up to 400 are packed in wooden crates.
In order to prevent damaging of the bearing during the motor transportation, the motors of frame size 160 and above are delivered with fixed rotor.

QNESTIONNAIRE

Please, answer the questions from the attached questionnaire as fully as possible, to enable offering of induction electric motors (page 15) and send it to the manufacturer.

Table 1 - Bearings

Type	Drive end	Opposite end		Grease		Grease quantity		Regreasing period , h			
				Insulation class				Number of poles			
		Horizontal design	Vertical design	B, F	H	g	cm^3	2	4	6	8,10,12
1.ZK 71	6003 2Z C3	6003 2Z C3		For life lubricated							
1.ZK 80	6204 2Z C3	6204 2Z C3									
1.ZK 90	6205 2Z C3	6205 2Z C3									
2.ZK 100	6206 2Z C3	6206 2Z C3									
2.ZK 112	6206 2Z C3	6206 2Z C3									
1.ZK 132 M, L	6208 2Z C3	6208 2Z C3									
1.ZK 160 M, L	6210 2Z C3	6210 2Z C3									
1.ZK 180 M, L	6310 C3	6310 C3		Lithium based grease	Silicone based grease	Without regreasing device		10000	11500		
1.ZK 200 L	6312 C3	6312 C3							20000		
1.ZK 225 M, S	6313 C3	6313 C3									
1.ZK 250 M	6314 C3	6314 C3				27	34	2500	5900	10500	13000

Table 2 - Terminal box

Type	Number of terminals	Terminal stud thread	Max. Permissi - ble current A	Number of entries	Dimension of entries	Max. Cable diameter mm	Terminal box position
1.ZK 71	6[1]	M4	21	2	AU 13.5	13	Top mounted only
1.ZK 80							
1.ZK 90							Top mounted [2]
2.ZK 100					AU 16	16	
2.ZK 112							
1.ZK 132		M5	35		AU 21	21	Right hand side (left hand side on request)
1.ZK 160		M6	60		AU 29	30	
1.ZK 180							
1.ZK 200		M8	100		AU 36	38	
1.ZK 225							
1.ZK 250		M10	200				

Note:
1) 12 terminals available on request for all types of frame size 90.

QUESTIONNAIRE FOR THE OFFER OF ASYNCHRONOUS ELECTRIC MOTORS

ATB SEVER
Technology in Motion

Enquiry Number:

Customer: _____ ITEM: _____ Qty: _____

A MOTOR DATA

1 Motor type: Three phase: Single phase:
2 Rotor type: Squirrel cage: Slip-ring:
3 Rated output: P_N= _____ kW
4 Rated voltage: U_N= _____ V Connect: Star Delta
5 Rated frequency: f_N= _____ Hz
6 Rated speed: n_N= _____ rpm
7 Insulation class: F ☐ B ☐
8 Duty type:

	S1	S2	S3	S4	S5	S6	S7	S8	S9	S10
ED %										

starts /h _____ min _____ J_{mot} _____ kgm^2
9 Standard: _____ IEC or _____
10 Cooling method: _____ IC
11 Mounting arrengement: IM
12 Protection degree: Motor IP: _____ Terminal box IP: _____
13 *Sense of rotation: Left Right Both
14 Motor brake: yes ☐ no ☐
Braking moment: _____ Nm
Brake voltage: _____ V/Hz _____ V,DC
15 No-load regime? (single phase motor) yes no
16 Rotor data: U_{2c}= _____ V I_{2n}= _____ A

B DATA ABOUT THE DRIVEN MACHINE

1 Type:
2 Required power:
3 Required speed:
4 Load torque characteristic:
Constant: Squared _____ or _____

Speed %:	0	25	50	75	100
Torque Nm:					

5 Moment of inertia: J= _____ kgm^2
6 Running machine special data:

C AMBIENT CONDITIONS

1 Ambient temperature: C
2 Relative humidity: %
3 Altitude (above sea level): m
4 Specific ambient conditions:

You are kindly requested to provide us with as much data as possible thus enabling us to offer satisfactorily

D POWER TRANSMISSION AND STARTING CONDITIONS

1 Coupling type:
2 Starting:
3 Number of consecutive startings:
Hot state: Cold state:
_____ per hour _____ per hour
_____ per day _____ per day

E ADDITIONAL REQUESTS FOR MOTOR EXECUTION

1 Overloading from: _____ % P_N
Duration: _____ min
2 Temperature rise: F ☐ B ☐
3 Request for: vibration level _____ mm/s
noise level _____ db
4 *Terminal box position:
left ☐ right ☐ On top ☐
5 Additional shaft loading sense
axial force radial force
6 Converter feed operation: yes ☐ no ☐
Converter type: _____
Manufacturer: _____
Speed range: from _____ to _____ rpm
7 Sensor category (mark in lower field):

Taho gen.	Encoder	Absolute	Resolver

Sensor Type: _____
8 Flange size: _____ mm
9 Second shaft end: yes ☐ no ☐
DA= _____ mm EA= _____ mm
10 Other requests and limits:

F ADDITIONAL EQUIPMENT, SPARE PARTS AND DOCUMENTATION

1 Thermal protection: yes ☐ no ☐
Type: _____
2 Bearings thermometers yes ☐ no ☐
3 Anti-condesation heaters yes ☐ no ☐
4 Spare parts yes ☐ no ☐
5 Guarantee sheet yes ☐ no ☐
6 Language of instruction list:
7 Other requests for packing:

H CUSTOMER

1 Company:
2 Adress:
3 City:
4 Country:
5 Person:
6 Telefon / Telefax:
7 e-mail:

* OBSERVED FROM DRIVE END

ATB Group - a global player

a company of **A-TEC** INDUSTRIES AG



















Company locations

Austria

Head office
ATB AUSTRIA ANTRIEBSTECHNIK AG
Hohenstaufengasse 7,
1010 Vienna
Phone: +43 1 90250-0
Fax: +43 1 90250-110
E-Mail: info@atb-motors.com
Http://**www.atb-motors.com**

ATB MOTORENWERKE GmbH
G.-Bauknecht-Straße 1,
A-8724 Spielberg
Phone: +43 3577 757-0
Fax: +43 3577 757-182
E-Mail: info@at.atb-motors.com

ATB TECHNOLOGIES GmbH
Millennium Park 11,
A-6890 Lustenau
Phone: +43 5577 9010 - 0
Fax: +43 5577 9010 - 110
E-Mail: info@at.atb-motors.com

Germany

ATB ANTRIEBSTECHNIK GmbH
Silcherstraße 74,
D-73642 Welzheim
Phone: +49 7182 14 - 1
Fax: +49 7182 14 - 590
E-Mail: info@de.atb-motors.com

ATB MOTORENTECHNIK GmbH
Helgoländer Damm 75,
D-26954 Nordenham
Phone: +49 4731 365 0
Fax: +49 4731 365 159
E-Mail: nordenham@de.atb-motors.com

France
ATB SELNI SAS
6 rue Louise Michel BP 24,
F-58028 Nevers Cedex
Phone: +33 3 86 93 42 00
Fax: +33 3 86 93 42 22
E-Mail: info@fr.atb-motors.com

Great Britain

ATB MORLEY Ltd.
Bradford Road, West Yorkshire,
LS28 6QA Leeds
Phone: +44 113 257 1734
Fax: +44 113 257 0751
E-Mail: sales@uk.atb-motors.com

ATB LAURENCE SCOTT LTD.
PO Box 25 Hardy Road,
NR1 1JD Norwich, Norfolk
Phone: +44 1603 628 333
Fax: +44 1603 619 788
E-Mail: admin@laurence-scott.com

Serbia

ATB SEVER a.d.
Magnetna polja 6,
24000 Subotica
Phone: +381 24 665 100, 665 200
Fax: +381 24 665 105
E-Mail: sever@rs.atb-motors.com

Czech Republic

ATB COMPONENTS S.R.O.
Lihovarská 1335/9,
CZ-71610 Ostrava - Radvanice
Phone: +420 5 962 333 40
Fax: +420 5 962 333 40
E-Mail: atb.bastro@quick.cz

ATB SEVER a.d.
Magnetna polja 6
24 000 Subotica
Serbia
Phone +381 24 665 124
Fax +381 24 665 125
www.atb-motors.com
sever@rs.atb-motors.com