Tehnical Documentation





LOW VOLTAGE THREE PHASE
TEFC CAGE MOTORS

LV06EN

ATB SEVER
Technology in Motion

Vision



We set your ideas in motion. We do not merely manufacture motors, but instead turn the ambitious concepts of our customers into modern, innovative and reliable products, which are unique and point the way to the future. We bring our customers closer to their goals with reliability, creativity and flexibility.

Business Units



Serial Motors



New Businesses



Home Appliances

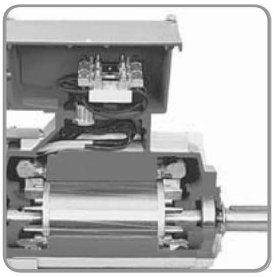

Project Motors

Low voltage three phase totally enclosed fan cooled cage motors

Electrical Data

Mechanical protection: IP 55 | **Voltage: 400 V, 50 Hz**

Type	Output power P_N kW	Rated speed n_N min^{-1}	Efficiency η %	Power factor cos φ	Rated current I_N A	Rated torque T_N Nm	I_1/I_N	T_1/T_N	T_b/T_N	Torque class KR	Moment of inertia J kgm^2	Mass kg
3000 min^{-1}												
1.ZK 63 A-2	0.18	2700	60.0	0.80	0.54	0.64	3.2	2.0	2.4	16	0.00014	4.2
1.ZK 63 B-2	0.25	2730	62.0	0.80	0.72	0.87	3.5	2.2	2.4	16	0.00017	4.6
1.ZK 71 A-2	0.37	2750	63.0	0.81	1.1	1.30	3.4	2.0	2.2	16	0.00023	5.4
1.ZK 71 B-2	0.55	2760	69.0	0.81	1.4	1.90	4.8	2.2	2.6	16	0.00033	6.3
1.ZK 80 A-2	0.75	2770	71.0	0.80	1.9	2.60	4.8	2.1	2.5	16	0.00055	8.3
1.ZK 80 B-2	1.1	2770	73.0	0.84	2.6	3.80	4.4	2.2	2.3	16	0.00066	9.1
1.ZK 90 S-2	1.5	2810	74.0	0.85	3.4	5.10	5.0	2.2	2.4	16	0.00123	12.5
1.ZK 90 L-2	2.2	2830	80.0	0.85	4.7	7.40	6.0	2.8	3.1	16	0.00184	16
2.ZK 100 L-2	3	2820	78.0	0.83	6.7	10	6.5	2.7	3.2	16	0.00378	19
2.ZK 112 M-2	4	2830	82.0	0.90	7.8	13	7.6	3.2	3.3	16	0.005	24
1.ZK 132 Sk-2	5.5	2840	86.0	0.88	10.7	18	8.5	3.6	3.8	16	0.01	47
1.ZK 132 S-2	7.5	2860	84.0	0.90	14.3	25	8.8	3.7	4.0	16	0.013	56
1.ZK 160 Mk-2	11	2910	86.0	0.87	21	36	8.5	3.7	3.9	16	0.021	89
1.ZK 160 M-2	15	2910	87.0	0.88	29	49	8.5	3.7	3.9	16	0.028	108
1.ZK 160 L-2	18.5	2910	88.0	0.88	34	61	8.9	3.7	3.9	16	0.034	113
1.ZK 180 M-2	22	2920	89.0	0.88	41	72	8.0	3.5	3.4	16	0.057	138
1.ZK 200 Lk-2	30	2935	89.5	0.89	55	98	7.5	3.1	3.1	16	0.11	199
1.ZK 200 L-2	37	2940	90.0	0.88	68	120	7.9	3.2	3.2	16	0.13	215
1.ZK 225 M-2	45	2960	91.5	0.87	82	145	7.2	2.7	2.9	16	0.23	290
1.ZK 250 M-2	55	2960	93.0	0.87	99	177	7.5	2.5	3.0	16	0.36	395
1.ZK 280 S-2	75	2960	93.0	0.89	131	242	7.5	2.1	2.8	16	0.67	510
1.ZK 280 M-2	90	2960	93.5	0.89	156	290	7.5	2.5	3.1	16	0.81	600
1.ZK 315 S-2	110	2970	93.0	0.94	181	354	8.0	1.8	3.7	13	1.17	680
1.ZK 315 M-2	132	2970	93.5	0.93	219	424	8.0	1.8	3.8	13	1.4	840
1.ZKI 315 Mk-2	160	2973	95.0	0.91	270	515	7.0	1.7	2.3	10	2.0	1100
1.ZKI 315 M-2	200	2976	95.5	0.91	335	643	7.5	1.9	2.4	13	2.5	1290
2.ZKI 315 Lk-2	250	2977	96.3	0.93	403	802	7.0	1.8	2.5	10	4.7	1450
2.ZKI 315 L-2	315	2982	96.3	0.93	508	1010	7.5	1.7	2.5	10	5.4	1720
2.ZKI 355 Mk-2	250	2977	96.3	0.91	412	802	7.0	1.3	2.9	10	4.7	1530
2.ZKI 355 M-2	315	2982	96.3	0.92	505	1010	7.5	1.8	3.3	10	5.4	1730
2.ZKI 355 Md-2	355	2982	96.7	0.92	576	1137	7.7	1.8	3.3	10	5.7	1950
2.ZKI 355 Lk-2	400	2982	96.7	0.92	650	1281	8.0	2.0	3.5	10	6.5	2550
2.ZKI 355 L-2	450	2982	96.7	0.92	730	1441	8.2	2.0	3.6	10	6.9	2770
2.ZKI 355 Ld-2	500	2982	96.7	0.92	812	1600	8.2	2.1	3.7	10	7.5	2910
2.ZKI 400 Lk-2	560											
2.ZKI 400 L-2	630					On request!						
2.ZKI 400 Ld-2	710											

I_1/I_N - Locked rotor current ratio, T_1/T_N - Locked rotor torque ratio, T_b/T_N - Break down torque ratio, Mass - For IM B3

2 Electrical Data

Mechanical protection: IP 55 | **Voltage: 400 V, 50 Hz**

Type	Output power P_N kW	Rated speed n_N min^{-1}	Efficiency η %	Power factor cos φ	Rated current I_N A	Rated torque T_N Nm	I_1/I_N	T_1/T_N	T_b/T_N	Torque class KR	Moment of inertia J kgm^2	Mass kg
1500 min^{-1}												
1.ZK 63 A-4	0.12	1310	60.0	0.66	0.44	0.87	3.0	1.8	2.1	13	0.00027	4.4
1.ZK 63 B-4	0.18	1330	63.0	0.74	0.56	1.29	3.2	2.2	2.1	13	0.00037	5
1.ZK 71 A-4	0.25	1340	63.0	0.76	0.75	1.80	3.2	1.7	1.9	13	0.00038	5.3
1.ZK 71 B-4	0.37	1340	62.0	0.75	1.1	2.60	3.5	2.0	2.1	13	0.00055	6.3
1.ZK 80 A-4	0.55	1375	69.0	0.75	1.5	3.80	3.8	1.9	2.0	13	0.0009	8.2
1.ZK 80 B-4	0.75	1375	72.0	0.75	2.0	5.20	3.8	2.1	2.2	13	0.0011	9
1.ZK 90 S-4	1.1	1410	74.0	0.78	2.8	7.50	4.1	2.0	2.3	16	0.0023	13.2
1.ZK 90 L-4	1.5	1405	77.0	0.78	3.6	10	4.6	2.1	2.8	16	0.0032	15.8
2.ZK 100 L-4	2.2	1410	78.0	0.81	5.0	15	5.4	2.2	2.8	16	0.0054	20.5
2.ZK 100 Ld-4	3	1410	76.0	0.80	7.1	20	5.7	2.4	2.7	16	0.0071	22.6
2.ZK 112 M-4	4	1420	81.0	0.82	8.6	27	6.5	2.9	3.0	16	0.013	28.4
1.ZK 132 S-4	5.5	1450	85.0	0.82	11.4	36	6.5	2.5	3.1	16	0.019	53
1.ZK 132 M-4	7.5	1450	86.0	0.80	15.7	49	6.5	2.4	3.2	16	0.025	64
1.ZK 160 M-4	11	1440	88.0	0.83	22	73	6.5	2.8	3.0	16	0.055	89
1.ZK 160 L-4	15	1440	88.0	0.82	30	99.5	6.8	3.0	3.0	16	0.073	118
1.ZK 180 M-4	18.5	1460	88.0	0.82	37	121	6.2	2.8	2.6	16	0.086	140
1.ZK 180 L-4	22	1460	89.0	0.81	44	144	6.2	2.8	2.5	16	0.102	155
1.ZK 200 L-4	30	1470	90.0	0.84	57	195	7.5	2.9	2.8	16	0.27	230
1.ZK 225 S-4	37	1470	92.0	0.83	70	240	6.2	2.3	2.3	16	0.362	280
1.ZK 225 M-4	45	1470	92.0	0.82	83	292	6.2	2.3	2.5	16	0.442	320
1.ZK 250 M-4	55	1480	92.5	0.85	101	355	6.2	2.1	2.4	16	0.64	415
1.ZK 280 S-4	75	1480	93.0	0.86	135	486	7.0	2.4	2.4	16	1.1	545
1.ZK 280 M-4	90	1480	93.0	0.86	162	581	7.0	2.4	2.4	16	1.31	603
1.ZK 315 S-4	110	1482	93.7	0.92	184	710	7.0	1.9	2.4	13	2.12	750
1.ZK 315 M-4	132	1477	94.0	0.92	221	855	6.8	1.9	2.4	13	2.54	850
1.ZKI 315 Mk-4	160	1486	94.5	0.90	275	1030	7.3	2.0	2.8	13	3.6	1087
1.ZKI 315 M-4	200	1486	95.0	0.91	335	1285	7.0	1.7	2.2	13	4.3	1208
2.ZKI 315 Lk-4	250	1488	95.2	0.87	436	1605	7.8	1.9	2.9	13	5.0	1450
2.ZKI 315 L-4	315	1487	95.4	0.88	542	2023	7.7	2.0	2.8	13	6.0	1720
2.ZKI 355 Mk-4	250	1491	95.7	0.90	419	1600	7.3	2.0	3.0	10	7.6	1750
2.ZKI 355 M-4	315	1492	96.0	0.90	535	2016	7.3	2.1	3.2	13	9.9	1930
2.ZKI 355 Md-4	355	1492	96.2	0.89	592	2272	8.3	2.5	3.2	13	13.0	2150
2.ZKI 355 Lk-4	400	1492	96.3	0.90	666	2560	8.4	2.6	3.3	13	14.5	2545
2.ZKI 355 L-4	450	1492	96.4	0.90	748	2880	8.5	2.6	3.3	13	17.0	2770
2.ZKI 355 Ld-4	500	1492	96.5	0.91	822	3200	8.5	2.6	3.3	13	19.0	2920
2.ZKI 400 Lk-4	560											
2.ZKI 400 L-4	630					On request!						
2.ZKI 400 Ld-4	710											

I_1/I_N - Locked rotor current ratio, T_1/T_N - Locked rotor torque ratio, T_b/T_N - Break down torque ratio, Mass - For IM B3

Electrical Data

Mechanical protection: IP 55

Voltage: 400 V, 50 Hz

Type	Output power P_N kW	Rated speed n_N min^{-1}	Efficiency η %	Power factor cos φ	Rated current I_N A	Rated torque T_N Nm	I_1/I_N	T_1/T_N	T_b/T_N	Torque class KR	Moment of inertia J kgm^2	Mass kg
1000 min^{-1}												
1.ZK 63 A-6	0.09	870	44.0	0.68	0.45	0.98	2.1	1.7	1.8	13	0.00027	4.4
1.ZK 63 B-6	0.12	880	43.0	0.63	0.64	1.3	2.3	2.2	2.6	13	0.00037	5
1.ZK 71 A-6	0.18	900	57.0	0.65	0.70	1.9	2.6	1.9	2.0	13	0.00055	6.1
1.ZK 71 B-6	0.25	890	57.0	0.64	1.0	2.7	2.6	1.8	2.1	13	0.00071	6.8
1.ZK 80 A-6	0.37	910	62.0	0.69	1.2	3.9	3.3	2.0	2.2	13	0.0018	9
1.ZK 80 B-6	0.55	910	68.0	0.66	1.8	5.7	3.5	2.4	2.4	13	0.0024	11.6
1.ZK 90 S-6	0.75	920	70.0	0.72	2.1	7.8	3.3	1.9	2.1	16	0.0037	13
1.ZK 90 L-6	1.1	910	70.0	0.70	3.3	11.2	3.8	2.2	2.4	16	0.0054	16.3
2.ZK 100 L-6	1.5	920	72.0	0.75	4.0	16.0	4.2	2.1	2.2	13	0.0054	20.5
2.ZK 112 M-6	2.2	930	76.0	0.75	5.6	23.0	4.5	2.0	2.1	16	0.012	27
1.ZK 132 S-6	3	940	77.0	0.78	7.2	30.0	4.5	2.0	2.1	13	0.015	47
1.ZK 132 Mk-6	4	940	82.0	0.77	9.1	40.2	4.5	1.9	2.0	13	0.02	57
1.ZK 132 M-6	5.5	950	83.0	0.77	12.4	55.3	4.5	1.9	2.1	13	0.028	68
1.ZK 160 M-6	7.5	950	84.0	0.77	17	75	5.5	2.0	2.4	16	0.049	90
1.ZK 160 L-6	11	950	84.0	0.78	24.5	110	6.0	2.2	2.5	16	0.07	120
1.ZK 180 L-6	15	960	87.0	0.82	30.5	149	6.0	2.2	2.7	16	0.144	150
1.ZK 200 Lk-6	18.5	970	89.0	0.81	38	182	6.5	2.0	2.7	16	0.225	205
1.ZK 200 L-6	22	970	90.0	0.80	44	217	6.5	2.0	2.7	16	0.27	230
1.ZK 225 M-6	30	975	91.0	0.81	59	294	6.5	2.0	2.7	16	0.656	330
1.ZK 250 M-6	37	980	91.0	0.83	71	361	6.0	2.0	2.2	13	0.9	390
1.ZK 280 S-6	45	982	92.5	0.85	83	438	6.9	2.4	2.8	16	1.5	500
1.ZK 280 M-6	55	982	93.0	0.84	102	533	6.9	2.3	2.6	16	1.82	560
1.ZK 315 S-6	75	987	92.7	0.87	134	725	7.3	2.2	2.6	16	2.7	720
1.ZK 315 M-6	90	988	93.0	0.88	160	870	7.5	2.2	2.6	16	3.18	840
1.ZKI 315 Mk-6	110	987	94.0	0.87	195	1064	6.5	1.75	2.4	16	5.5	1035
1.ZKI 315 M-6	132	988	94.5	0.87	235	1276	7.0	1.8	2.6	16	6.6	1140
1.ZKI 315 Md-6	160	989	95.0	0.87	280	1545	7.0	2.0	2.7	16	7.0	1260
2.ZKI 315 Lk-6	200	987	94.9	0.84	362	1935	7.2	2.3	2.5	13	7.49	1450
2.ZKI 315 L-6	250	986	95.0	0.85	447	2421	7.0	2.2	2.4	13	9.32	1720
2.ZKI 355 Mk-6	200	989	95.7	0.87	348	1930	6.2	2.3	2.5	13	13.1	1636
2.ZKI 355 M-6	250	988	95.7	0.87	436	2417	6.1	2.3	2.5	13	14.9	1950
2.ZKI 355 Md-6	315	988	95.7	0.88	540	3045	6.2	2.3	2.5	13	16.5	2240
2.ZKI 355 Lk-6	355	990	95.9	0.89	600	3425	6.5	2.3	2.6	13	18	2767
2.ZKI 355 L-6	400	990	96.0	0.89	676	3858	6.8	2.3	2.6	13	20	2990
2.ZKI 400 Lk-6	450											
2.ZKI 400 L-6	500					On request!						
2.ZKI 400 Ld-6	560											

I_1/I_N - Locked rotor current ratio, T_1/T_N - Locked rotor torque ratio, T_b/T_N - Break down torque ratio, Mass - For IM B3

4 Electrical Data

Mechanical protection: IP 55 | **Voltage: 400 V, 50 Hz**

Type	Output power P_N kW	Rated speed n_N min^{-1}	Efficiency η %	Power factor cos φ	Rated current I_N A	Rated torque T_N Nm	I_1/I_N	T_1/T_N	T_b/T_N	Torque class KR	Moment of inertia J kgm^2	Mass kg
750 min^{-1}												
1.ZK 63 A-8	0.055	610	34	0.66	0.35	0.9	1.8	1.7	1.8	13	0.00027	4.4
1.ZK 71 A-8	0.09	670	43.0	0.50	0.60	1.3	2.2	1.8	2.0	16	0.00055	6.1
1.ZK 71 B-8	0.12	680	46.0	0.50	0.75	1.7	2.2	1.9	2.2	16	0.00071	6.8
1.ZK 80 A-8	0.18	680	55.0	0.55	0.86	2.5	2.8	2.2	2.5	16	0.0018	9
1.ZK 80 B-8	0.25	680	59.0	0.56	1.10	3.5	2.8	2.3	2.5	16	0.0024	11.6
1.ZK 90 S-8	0.37	700	57.0	0.62	1.5	5.0	2.9	1.7	1.8	13	0.0037	13
1.ZK 90 L-8	0.55	700	61.0	0.61	2.1	7.5	3.0	2.0	2.0	13	0.0054	16.3
2.ZK 100 L-8	0.75	690	64.0	0.67	2.5	10.0	3.7	2.0	2.4	13	0.0054	20.5
2.ZK 100 Ld-8	1.1	670	64.0	0.70	3.5	15.7	3.5	2.1	2.4	13	0.0071	22.6
2.ZK 112 M-8	1.5	680	69.0	0.71	4.4	21	3.6	1.8	2.2	13	0.012	27
1.ZK 132 S-8	2.2	700	72.0	0.72	6.1	30	3.6	1.8	2.1	13	0.015	47
1.ZK 132 M-8	3	700	76.0	0.72	7.9	40	4.0	1.8	2.1	13	0.028	68
1.ZK 160 Mk-8	4	710	78.0	0.68	11.1	54	4.3	1.9	2.2	13	0.037	87
1.ZK 160 M-8	5.5	710	79.0	0.68	15	74	4.4	1.9	2.2	13	0.053	91.5
1.ZK 160 L-8	7.5	710	81.0	0.70	19	101	4.4	1.9	2.2	13	0.076	122
1.ZK 180 L-8	11	715	84.0	0.72	26.5	148	4.4	1.9	2.1	13	0.16	160
1.ZK 200 L-8	15	725	87.0	0.70	36	199	5.0	1.8	2.2	13	0.225	205
1.ZK 225 S-8	18.5	735	88.5	0.75	41	240	4.8	1.7	2.2	13	0.47	245
1.ZK 225 M-8	22	735	89.5	0.75	48	286	4.8	1.6	2.3	13	0.56	285
1.ZK 250 M-8	30	735	89.5	0.78	62	390	5.0	1.6	2.2	13	0.87	370
1.ZK 280 S-8	37	735	92.0	0.78	75	481	5.1	1.6	2.0	13	1.5	495
1.ZK 280 M-8	45	735	92.0	0.78	91	585	5.1	1.6	2.0	13	1.82	580
1.ZK 315 S-8	55	739	92.5	0.81	106	710	6.8	2.0	2.6	10	2.56	750
1.ZK 315 M-8	75	740	92.8	0.81	145	970	6.8	2.0	2.6	10	3.32	803
1.ZKI 315 Mk-8	90	742	93.5	0.78	180	1158	5.7	2.0	2.6	10	6.3	1045
1.ZKI 315 M-8	110	742	93.5	0.79	215	1416	5.5	2.0	2.5	10	7.8	1150
1.ZKI 315 Md-8	132	742	94.0	0.79	260	1699	5.5	2.0	2.5	10	8.9	1270
2.ZKI 315 Lk-8	160	739	94.2	0.81	301	2068	6.5	1.4	2.7	13	7.49	1450
2.ZKI 315 L-8	200	739	94.5	0.80	382	2585	6.8	1.5	2.9	13	9.32	1720
2.ZKI 355 Mk-8	160	743	95.4	0.82	297	2060	6.0	2.0	2.9	13	19.2	1825
2.ZKI 355 M-8	200	744	95.5	0.82	367	2570	6.0	2.1	3.0	13	22.4	2090
2.ZKI 355 Md-8	250	744	95.6	0.82	462	3209	6.1	2.1	3.0	13	26.2	2440
2.ZKI 355 Lk-8	315	745	95.7	0.82	580	4038	6.1	2.1	3.0	13	28	2810
2.ZKI 355 L-8	355	745	95.8	0.82	653	4550	6.2	2.1	3.1	13	30	3035
2.ZKI 400 Lk-8	400											
2.ZKI 400 L-8	450						On request!					
2.ZKI 400 Ld-8	500											

I_1/I_N - Locked rotor current ratio, T_1/T_N - Locked rotor torque ratio, T_b/T_N - Break down torque ratio, Mass - For IM B3

IM B3 - IM 1001

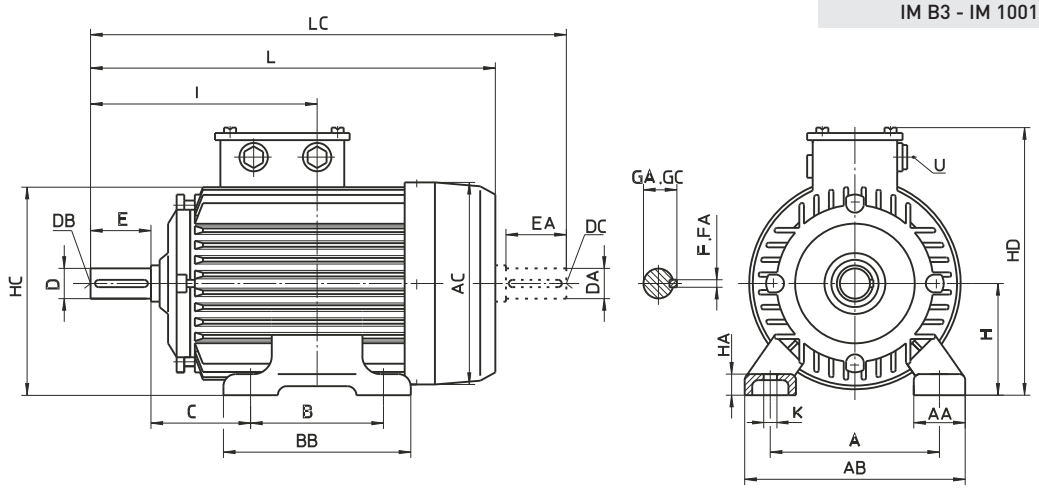

Type		Pole	A	AA	AB	AC	B	BB	C	D	DA	DB	DC	E	EA	F	FA	GA	GC	H	HA	HC	HD	I	K	L	LC	U
1.ZK 63		2,4,6,8	100	24	124	125	80	106	40	11	11	M4	M4	23	23	4	4	12.5	12.5	63	8	123	160	103	7	213	240	M20 x 1.5
1.ZK 71		2,4,6,8	112	34	142	140	90	114	45	14	11	M5	M4	30	23	5	4	16	12.5	71	8	142	176	120	7	241	267	M20 x 1.5
1.ZK 80		2,4,6,8	125	38	155	154	100	130	50	19	14	M6	M5	40	30	6	5	21.5	16	80	9	158	190	140	10	274	307	M20 x 1.5
1.ZK 90	S	2,4,6,8	140	40	180	170	100	130	56	24	24	M8	M8	50	50	8	8	27	27	90	12	177	211	156	10	307	360	M25 x1.5
	L						125	155																168.5		332	385	

IM B5, V1 - IM 3001, 3011

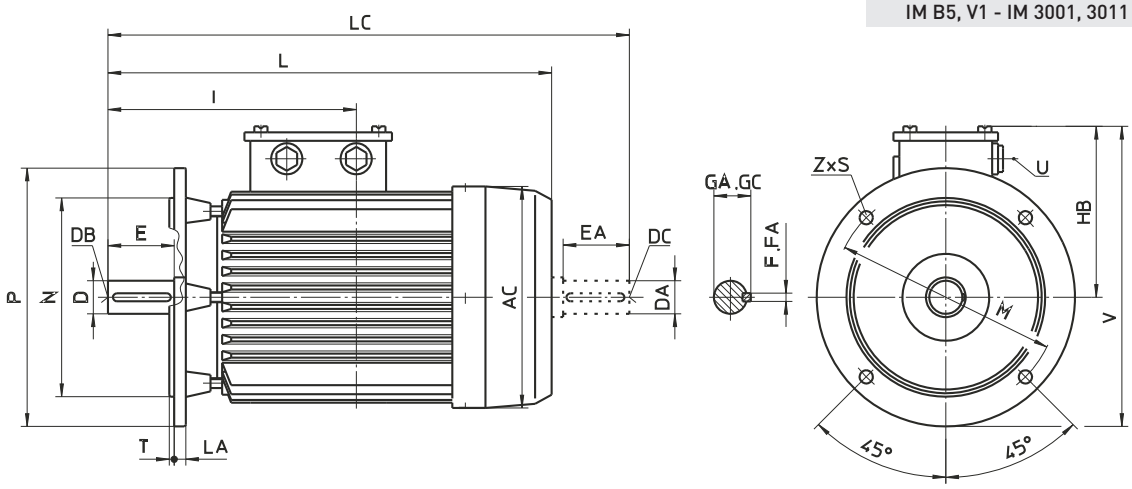

Type		Pole	Flange	AC	D	DA	DB	DC	E	EA	F	FA	GA	GC	HB	I	L	LA	LC	M	N	P	S	Z	T	V	U
1.ZK 63		2,4,6,8	FF 115	125	11	11	M4	M4	23	23	4	4	12.5	12.5	97	103	213	8	240	115	95	140	Ø10	4	3	167	M20 x 1.5
1.ZK 71		2,4,6,8	FF 130	140	14	11	M5	M4	30	23	5	4	16	12.5	105	120	241	10	267	130	110	160	Ø10	4	3.5	185	M20 x 1.5
1.ZK 80		2,4,6,8	FF 165	154	19	14	M6	M5	40	30	6	5	21.5	16	110	140	274	12	307	165	130	200	Ø12	4	3.5	210	M20 x 1.5
1.ZK 90	S	2,4,6,8	FF 165	170	24	24	M8	M8	50	50	8	8	27	27	121	156	307	12	360	165	130	200	Ø12	4	3.5	221	M25 x 1.5
	L															168.5	332		385								

The dimensions given in bold figures are obligatory according to the recommendation of IEC. All other technical data and dimensions during the future development of motors may undergo some changes and therefore they can be considered as obligatory after our confirmation only. All dimensions are given in millimetres.

6 Motor dimensions

IM B14 - IM 3601

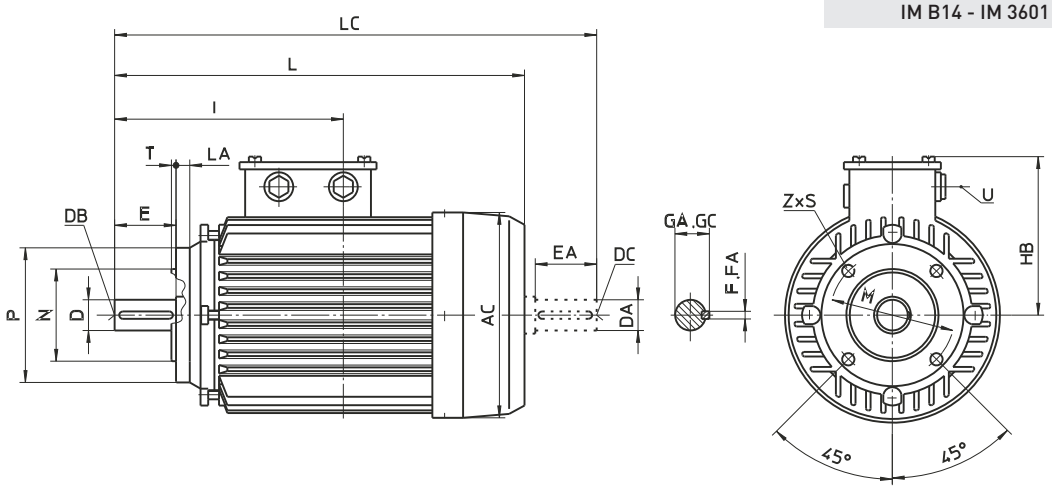

Type		Pole	Flange	AC	D	DA	DB	DC	E	EA	F	FA	GA	GC	HB	I	L	LA	LC	M	N	P	S	Z	T	U
1.ZK 63		2,4,6,8	FT 75	125	11	11	M4	M4	23	23	4	4	12.5	12.5	97	103	213	8	240	75	60	90	M5	4	2.5	M20 x 1.5
			FT 100															8		100	80	120	M6	4	3	
1.ZK 71		2,4,6,8	FT 85	140	14	11	M5	M4	30	23	5	4	16	12.5	105	120	241	8	267	85	70	105	M6	4	2.5	M20 x 1.5
			FT 115															10		115	95	140	M8	4	3	
1.ZK 80		2,4,6,8	FT 100	154	19	14	M6	M5	40	30	6	5	21.5	16	110	140	274	10	304	100	80	120	M6	4	3	M20 x 1.5
			FT 130															12		130	110	160	M8	4	3.5	
1.ZK 90	S	2,4,6,8	FT 115	170	24	24	M8	M8	50	50	8	8	27	27	121	156	307	10	360	115	95	140	M8	4	3.5	M25 x 1.5
			FT 130																	130	110	160			3.5	
	L	2,4,6,8	FT 115													168.5	332		385	115	95	140			3.5	
			FT 130																	130	110	160			3.5	

IM B3 - IM 1001

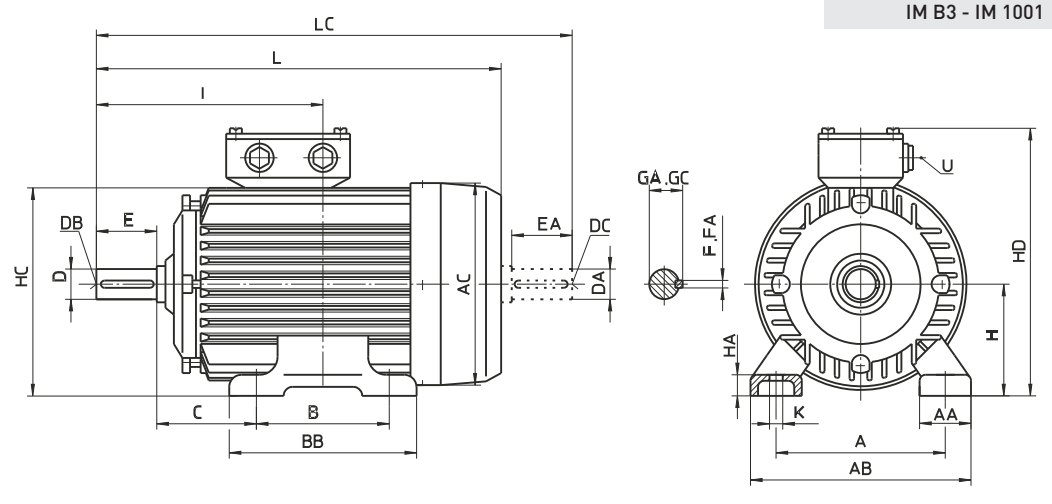

Type	Pole	A	AA	AB	AC	B	BB	C	D	DA	DB	DC	E	EA	F	FA	GA	GC	H	HA	HC	HD	I	K	L	LC	U
2.ZK 100 L	2,4,6,8	160	44	204	193	140	175	63	28	28	M10	M10	60	60	8	8	31	31	100	14	194	257	193	12	370	438	M25 x 1.5
2.ZK 100 Ld	4,8																										
2.ZK 112 M	2,4,6,8	190	46	236	216	140	175	70	28	28	M10	M10	60	60	8	8	31	31	112	16	218	281	200	12	380	445	M25 x 1.5

The dimensions given in bold figures are obligatory according to the recommendation of IEC. All other technical data and dimensions during the future development of motors may undergo some changes and therefore they can be considered as obligatory after our confirmation only. All dimensions are given in millimetres.

Motor dimensions

IM B5, V1 - IM 3001, 3011

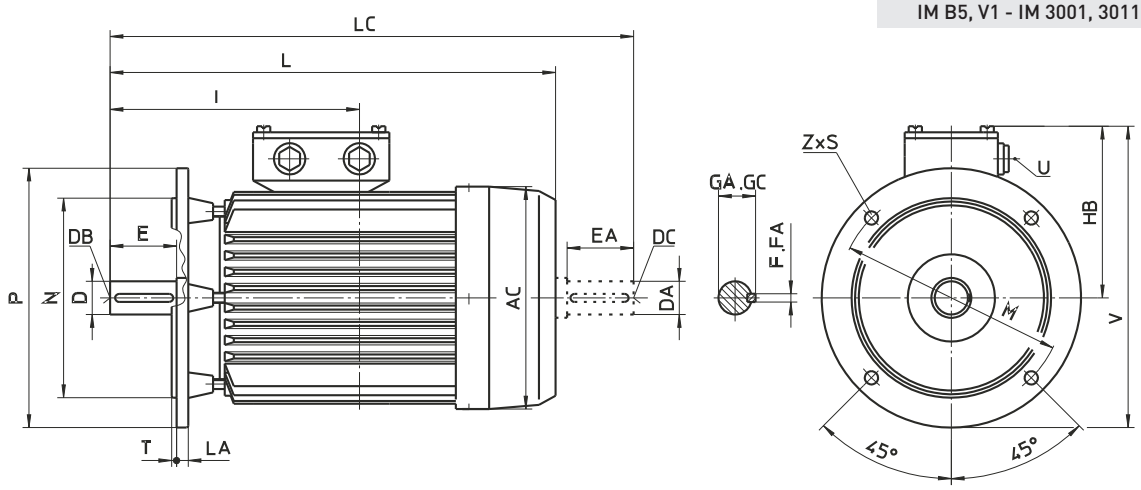

Type	Pole	Flange	AC	D	DA	DB	DC	E	EA	F	FA	GA	GC	HB	I	L	LA	LC	M	N	P	S	Z	T	V	U
2.ZK 100 L	2,4,6,8	FF 215	193	28	28	M10	M10	60	60	8	8	31	31	157	193	370	15	438	215	180	250	Ø14.5	4	4	282	M25 x 1.5
2.ZK 100 Ld	4,8																									
2.ZK 112 M	2,4,6,8		216	28	28	M10	M10	60	60	8	8	31	31	169	200	380	16	445	215	180	250	Ø14.5	4	4	294	M25 x 1.5

IM B14 - IM 3601

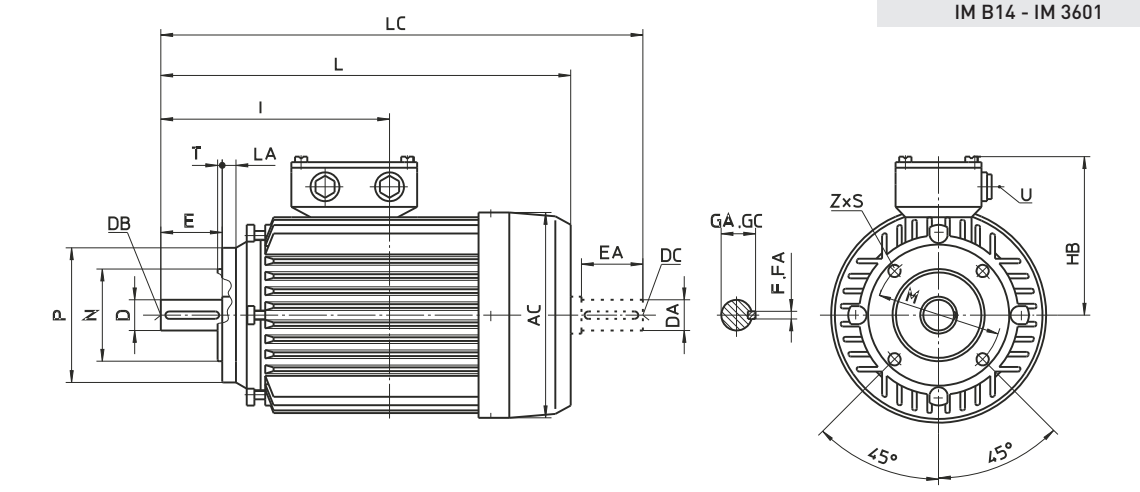

Type	Pole	Flange	AC	D	DA	DB	DC	E	EA	F	FA	GA	GC	HB	I	L	LA	LC	M	N	P	S	Z	T	U
2.ZK 100 L	2,4,6,8	FT 130	193	28	28	M10	M10	60	60	8	8	31	31	157	193	370	10	438	130	110	160	M8	4	3.5	M25 x 1.5
		FT 165															12		165	130	200	M10	4		
2.ZK 100 Ld	4,8	FT 130															10		130	110	160	M8	4		
		FT 165															12		165	130	200	M10	4		
2.ZK 112 M	2,4,6,8	FT 130	216	28	28	M10	M10	60	60	8	8	31	31	169	200	380	10	445	130	110	160	M8	4	3.5	M25 x 1.5
		FT 165															12		165	130	200	M10	4		

The dimensions given in bold figures are obligatory according to the recommendation of IEC. All other technical data and dimensions during the future development of motors may undergo some changes and therefore they can be considered as obligatory after our confirmation only. All dimensions are given in millimetres.

8 Motor dimensions

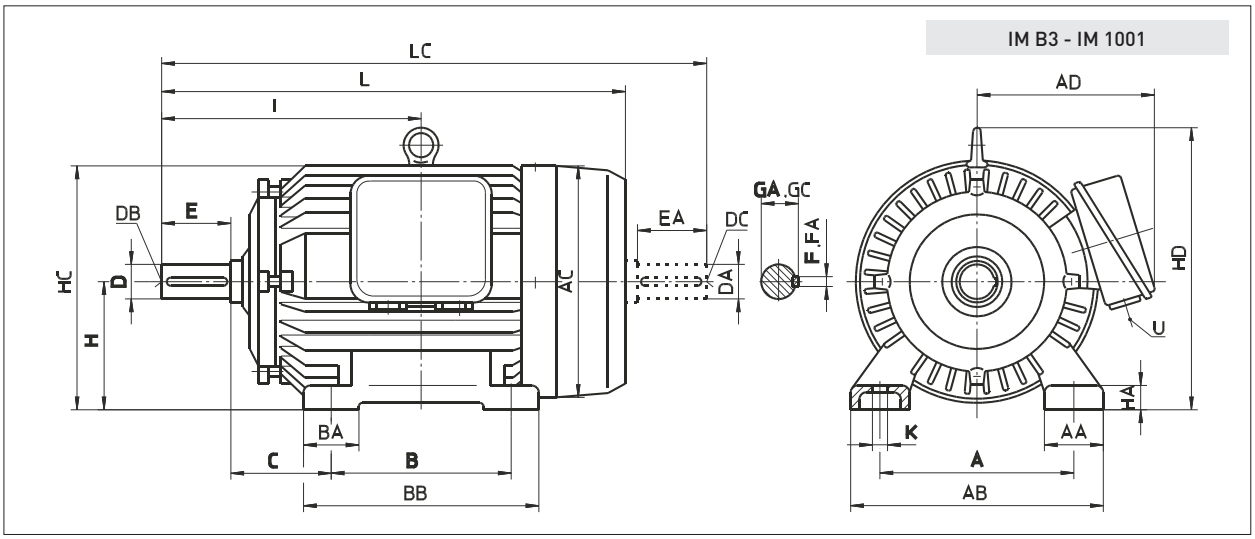

Type		Pole	A	AA	AB	AC	AD	B	BA	BB	C	D	DA	DB	DC	E	EA	F	FA	GA	GC	H	HA	HC	HD	I	K	L	LC	U
1.ZK 132	Sk	2	216	55	271	247	190	140	50	180	89	38	38	M12	M12	80	80	10	10	41	41	132	21	255	291	239	12	441	529	M32x1.5
	S	2,4,6,8																												
	Mk	6						178		218																258		479	567	
	M	4,6,8																												
1.ZK 160	Mk	2,8	254	60	314	285	246	210	65	260	108	42	42	M16	M16	110	110	12	12	45	45	160	23	300.5	345	323	15	589	709	M40x1.5
	M	2,4,6,8																												
	L	2,4,6,8						254		304																345		633	753	
1.ZK 180	M	2,4	279	70	349	323	260	241	82	296	121	48	48	M16	M16	110	110	14	14	51.5	51.5	180	28	342	387	351.5	15	652	772	M40x1.5
	L	4,6,8						279		334																370.5		690	810	
1.ZK 200	Lk	2,6	318	80	398	369	299	305	95	375	133	55	55	M20	M20	110	110	16	16	59	59	200	30	387.5	440	395.5	18	764	876	M50x1.5
	L	2,4,6,8																												
1.ZK 225	S	4,8	356	90	446	418	337	286	110	355	149	60	60	M20	M20	140	140	18	18	64	64	225	35	438	500	432	18	805	962	M50x1.5
	M	2						311		380		55	55			110	110	16	16	59	59					414.5		800	927	
		4,6,8										60	60			140	140	18	18	64	64					444.5		830	987	
1.ZK 250	M	2	406	96	506	474	360	349	95	430	168	60	60	M20	M20	140	140	18	18	64	64	250	40	487.5	549	482.5	24	906	1060	M50x1.5
		4,6,8										65	65							69	69									
1.ZK 280	S	2	457	110	567	510	379	368	112	450	190	65	65	M20	M20	140	140	18	18	69	69	280	45	536	607	514	24	973	1128	M50x1.5
		4,6,8										75	75					20	20	79.5	79.5									
	M	2						419		500		65	65					18	18	69	69					539.5		1024	1179	
		4,6,8										75	75					20	20	79.5	79.5									
1.ZK 315	S	2	508	125	633	562	427	406	120	500	216	65	65	M20	M20	140	140	18	18	69	69	315	50	599	670	559	28	1072	1217	M63x1.5
		4,6,8										80	80			170	170	22	22	85	85					589		1102	1277	
	M	2						457		550		65	65			140	140	18	18	69	69					584.5		1123	1268	
		4,6,8										80	80			170	170	22	22	85	85					614.5		1153	1328	

Note: On request, motors type 132, 225, 250 and 280 are available with top mounted terminal box.

The dimensions given in bold figures are obligatory according to the recommendation of IEC. All other technical data and dimensions during the future development of motors may undergo some changes and therefore they can be considered as obligatory after our confirmation only. All dimensions are given in millimetres.

Motor dimensions

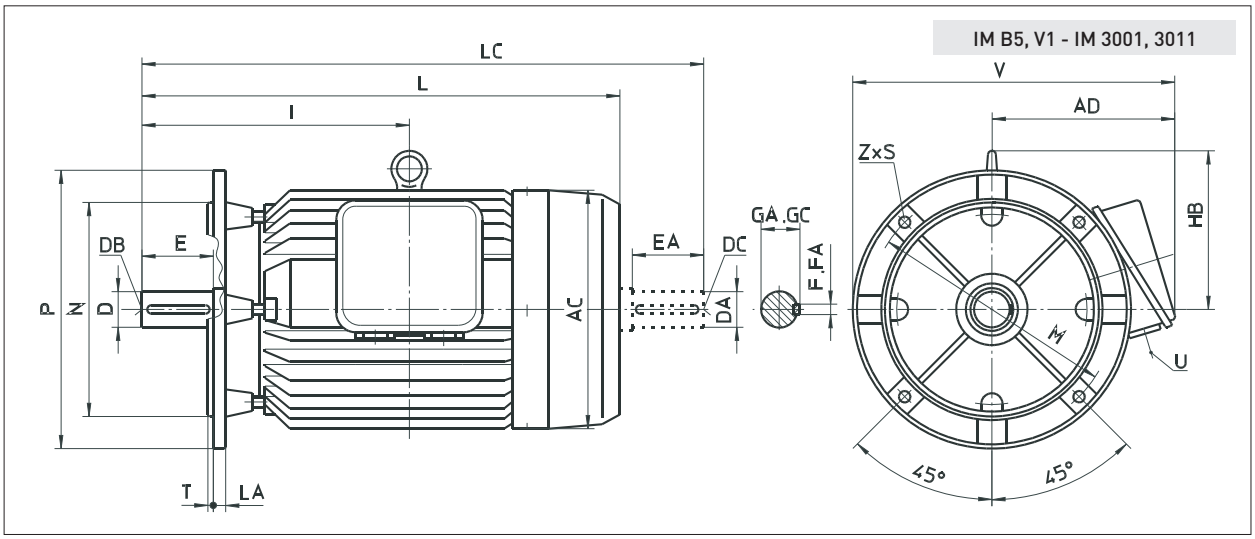

Type		Pole	Flange	AC	AD	D	DA	DB	DC	E	EA	F	FA	GA	GC	HB	I	L	LA	LC	M	N	P	S	Z	T	V	U
1.ZK 132	Sk	2	FF 265	247	190	**38**	38	M12	M12	**80**	80	**10**	10	**41**	41	159	239	441	16	529	**265**	**230**	**300**	**Ø14.5**	**4**	**4**	340	M32 x 1.5
	S	2,4,6,8																										
	Mk	6															258	479		567								
	M	4,6,8																										
1.ZK 160	Mk	2,8	FF 300	285	246	**42**	42	M16	M16	**110**	110	**12**	12	**45**	45	185	323	589	20	709	**300**	**250**	**350**	**Ø18.5**	**4**	**4**	421	M40 x 1.5
	M	2,4,6,8																										
	L	2,4,6,8															345	633		753								
1.ZK 180	M	2,4	FF 300	323	260	**48**	48	M16	M16	**110**	110	**14**	14	**51.5**	51.5	207	351.5	652	20	772	**300**	**250**	**350**	**Ø18.5**	**4**	**5**	435	M40 x 1.5
	L	4,6,8															370.5	690		810								
1.ZK 200	Lk	2,6	FF 350	369	299	**55**	55	M20	M20	**110**	110	**16**	16	**59**	59	240	395.5	764	20	876	**350**	**300**	**400**	**Ø18.5**	**4**	**5**	499	M50 x 1.5
	L	2,4,6,8																										
1.ZK 225	S	4,8	FF 400	418	337	**60**	60	M20	M20	**140**	140	**18**	18	**64**	64	275	432	805	20	962	**400**	**350**	**450**	**Ø18.5**	**8**	**5**	537	M50 x 1.5
	M	2				**55**	55			**110**	110	**16**	16	**59**	59		414.5	800		927								
		4,6,8				**60**	60			**140**	140	**18**	18	**64**	64		444.5	830		987								
1.ZK 250	M	2	FF 500	474	360	**60**	60	M20	M20	**140**	140	**18**	18	**64**	64	299	482.5	906	22	1060	**500**	**450**	**550**	**Ø18.5**	**8**	**5**	635	M50 x 1.5
		4,6,8				**65**	65							**69**	69													
1.ZK 280	S	2	FF 500	510	379	**65**	65	M20	M20	**140**	140	**18**	18	**69**	69	327	514	973	22	1128	**500**	**450**	**550**	**Ø18.5**	**8**	**5**	654	M50 x 1.5
		4,6,8				**75**	75					**20**	20	**79.5**	79.5													
	M	2				**65**	65					**18**	18	**69**	69		539.5	1024		1179								
		4,6,8				**75**	75					**20**	20	**79.5**	79.5													
1.ZK 315	S	2	FF 600	562	427	**65**	65	M20	M20	**140**	140	**18**	18	**69**	69	345	559	1072	25	1232	**600**	**550**	**660**	**Ø24**	**8**	**6**	757	M63 x 1.5
		4,6,8				**80**	80			**170**	170	**22**	22	**85**	85		589	1102		1292								
	M	2				**65**	65			**140**	140	**18**	18	**69**	69		584.5	1123		1283								
		4,6,8				**80**	80			**170**	170	**22**	22	**85**	85		614.5	1153		1328								

The dimensions given in bold figures are obligatory according to the recommendation of IEC. All other technical data and dimensions during the future development of motors may undergo some changes and therefore they can be considered as obligatory after our confirmation only. All dimensions are given in millimetres.

10 Motor dimensions

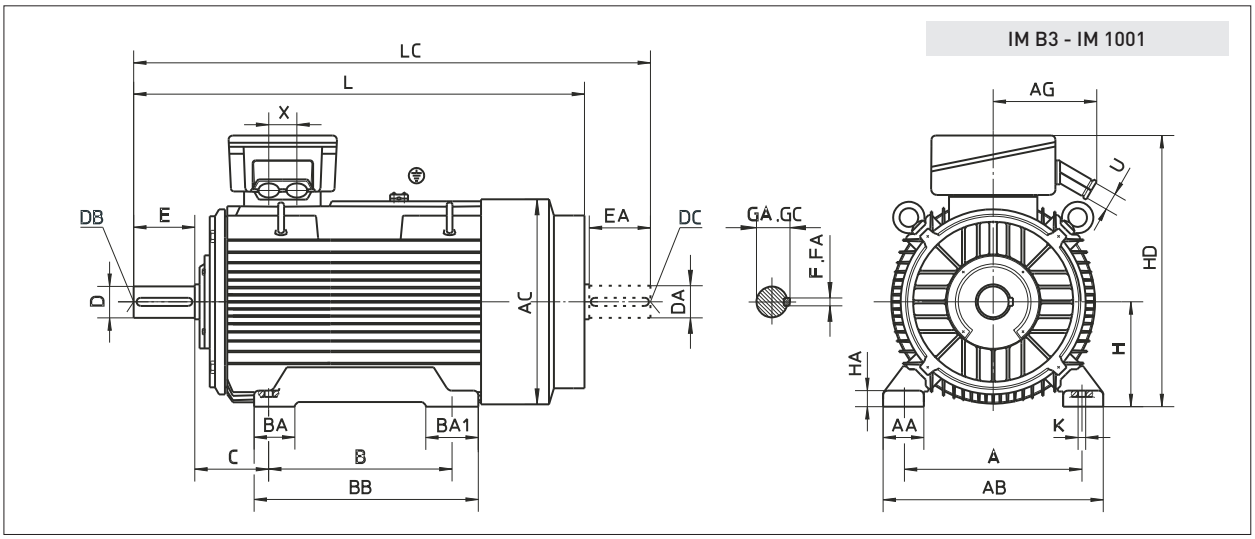

Type		Pole	A	AA	AB	AC	AG	B	BA	BA1	BB	C	D	DA	DB	DC	E	EA	F	FA	GA	GC	H	HA	HD	K	L	LC	U	X
1(2).ZKI 315	Mk, M	2	**508**	125	633	626	403	**457**	**508**	101	152	588	**216**	**65**	65	M20	M20	**140**	140	**18**	18	**69**	69	**315**	45	890	**Ø28**	1238	1393	Ø70	90
	Mk, M, Md	4,6,8												**90**	90	M24	M24	**170**	170	**25**	25	**95**	95					1268	1453		
1(2).ZKI 315	Lk, L	2	**560**	120	680	655	-	**560**	**630**	120	200	780	**200**	**65**	65	M20	M20	**140**	140	**18**	18	**69**	69	**315**	40	850	**Ø28**	1587	1732	Ø60	120
	Lk, L	4,6,8												**90**	90	M24	M24	**170**	170	**25**	25	**95**	95					1617	1792		

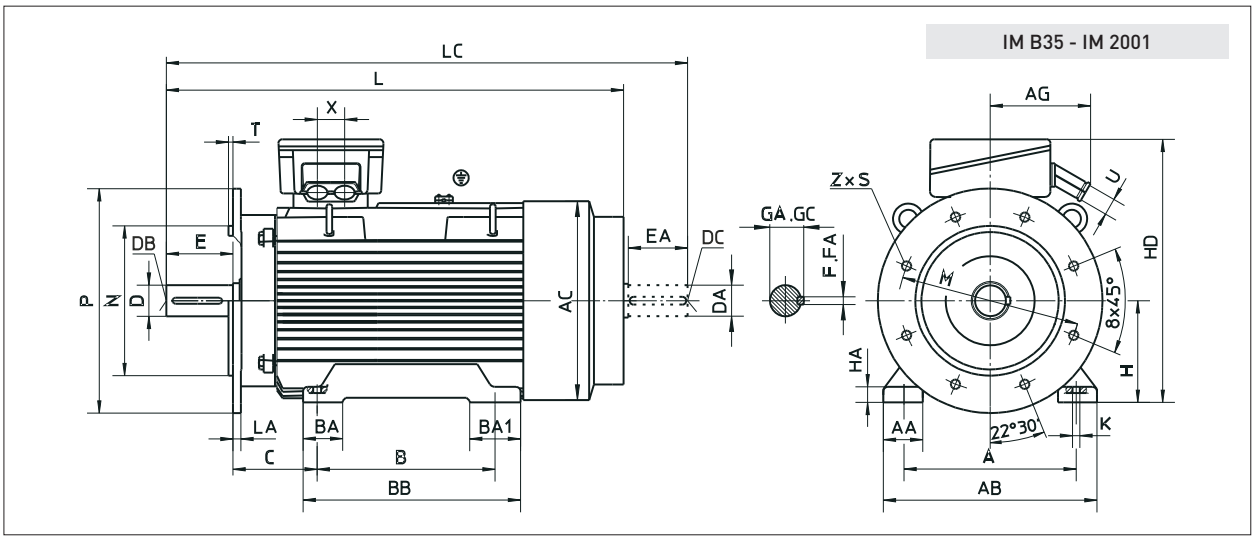

Type		Pole	Flange	A	AA	AB	AC	AG	B	BA	BA1	BB	C	H	HA	HD	K	L	LA	LC	M	N	P	S	Z	T	U	X
1(2).ZKI 315	Mk, M	2	FF 600	**508**	125	633	626	403	**457**	**508**	101	152	588	**216**	**315**	45	890	**Ø28**	1238	25	1393	**600**	**550**	**660**	**Ø24**	**8**	**6**	Ø70	90
	Mk, M, Md	4,6,8																	1268		1453								
1(2).ZKI 315	Lk, L	2	FF 740	**560**	120	680	655	-	**560**	**630**	120	200	780	**216**	**315**	40	850	**Ø28**	1587	25	1732	**740**	**680**	**800**	**Ø24**	**8**	**6**	Ø60	120
	Lk, L	4,6,8																	1617		1792								

Type		Pole	D	DA	DB	DC	E	EA	F	FA	GA	GC
1(2).ZKI 315	Mk, M	2	**65**	65	M20	M20	**140**	140	**18**	18	**69**	69
	Mk, M, Md	4,6,8	**90**	90	M24	M24	**170**	170	**25**	25	**95**	95
1(2).ZKI 315	Lk, L	2	**65**	65	M20	M20	**140**	140	**18**	18	**69**	69
	Lk, L	4,6,8	**90**	90	M24	M24	**170**	170	**25**	25	**95**	95

The dimensions given in bold figures are obligatory according to the recommendation of IEC. All other technical data and dimensions during the future development of motors may undergo some changes and therefore they can be considered as obligatory after our confirmation only. All dimensions are given in millimetres.

Motor dimensions

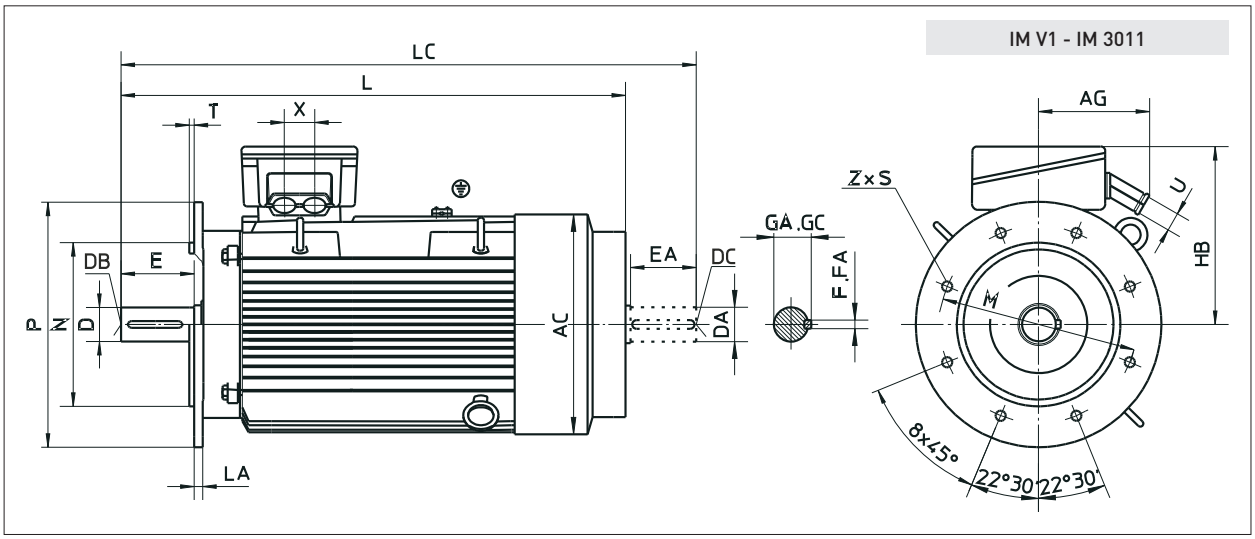

Type		Pole	Flange	AC	AG	D	DA	DB	DC	E	EA	F	FA	GA	GC	HB	L	LA	LC	M	N	P	S	Z	T	U	X
1(2).ZKI 315	Mk, M	2	FF 600	626	403	**65**	65	M20	M20	**140**	140	**18**	18	**69**	69	575	1238	25	1393	**600**	**550**	**660**	Ø24	**8**	**6**	Ø70	90
	Mk, M, Md	4,6,8				**90**	90	M24	M24	**170**	170	**25**	25	**95**	95		1268		1453								
2.ZKI 315	Lk, L	2	FF 740	655	-	**65**	65	M20	M20	**140**	140	**18**	18	**69**	69	535	1587	25	1732	**740**	**680**	**800**	Ø24	**8**	**6**	Ø60	120
	Lk, L	4,6,8				**90**	90	M24	M24	**170**	170	**25**	25	**95**	95		1617		1792								

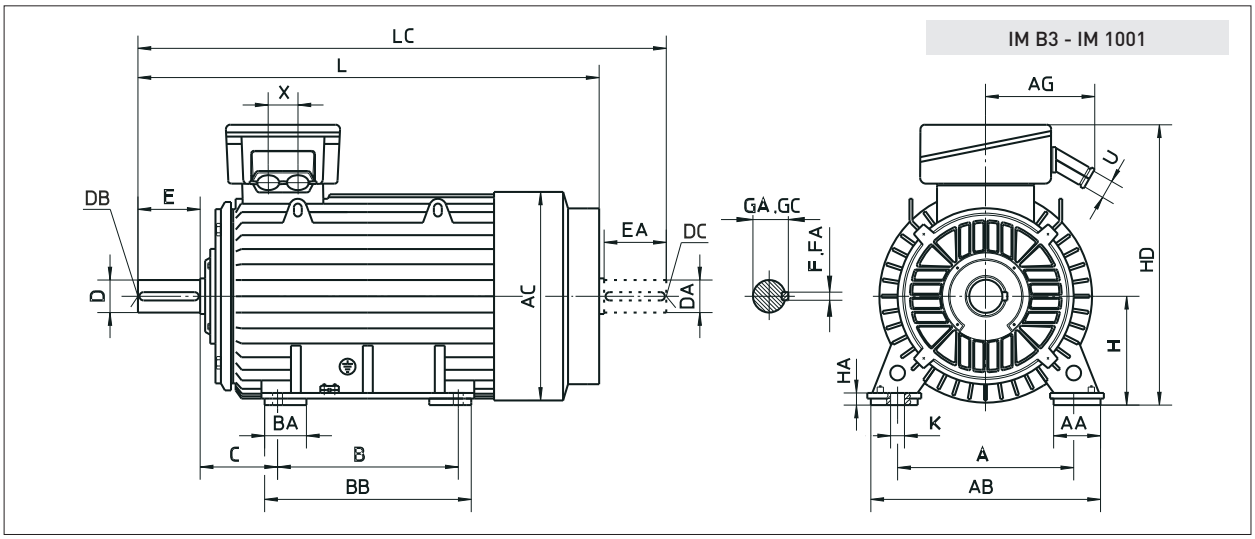

Type		Pole	A	AA	AB	AC	AG	B	BA	BB	C	D	DA	DB	DC	E	EA	F	FA	GA	GC	H	HA	HD	K	L	LC	U	X
2.ZKI 355	Mk, M, Md	2	**610**	140	750	713	403	**560**	140	660	**254**	**75**	75	M20	M20	**140**	140	**20**	20	**79.5**	79.5	**355**	35	945	**Ø28**	1463	1618	Ø70	90
	Lk, L, Ld		**630**	150	780			**800**	220	980	**200**														**Ø35**	1794	1949		
	Mk, M	4,6,8	**610**	140	750			**560**	140	660	**254**	**100**	100	M24	M24	**210**	210	**28**	28	**106**	106				**Ø28**	1533	1758		
	Md																									1651	1876		
	Lk, L, Ld		**630**	150	780			**800**	220	980	**200**														**Ø35**	1864	2089		

The dimensions given in bold figures are obligatory according to the recommendation of IEC. All other technical data and dimensions during the future development of motors may undergo some changes and therefore they can be considered as obligatory after our confirmation only. All dimensions are given in millimetres.

12 Motor dimensions

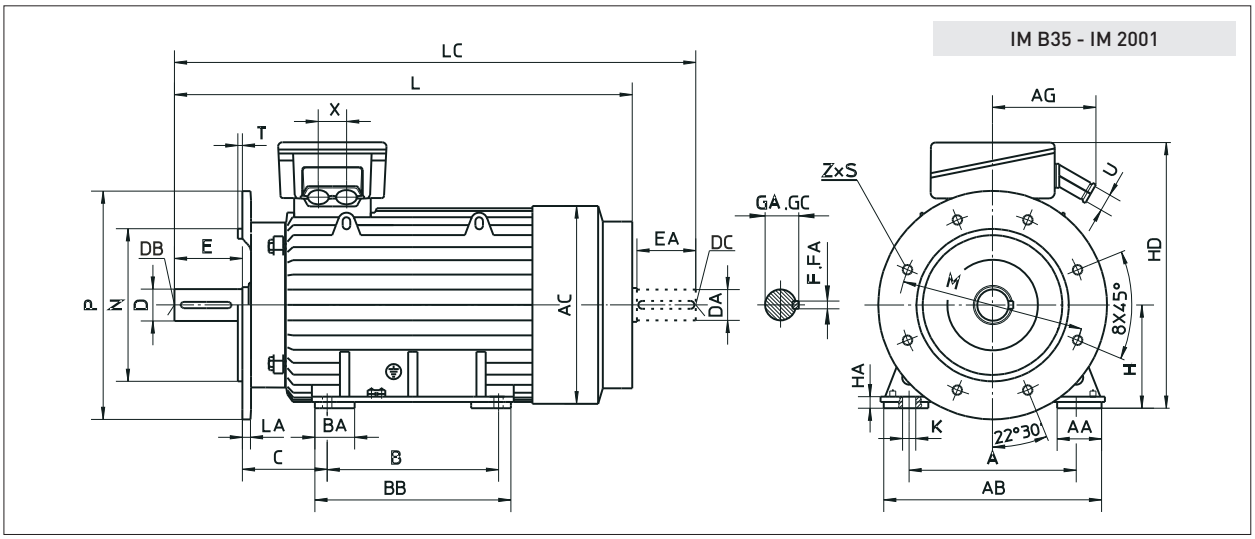

Type		Pole	Flange	A	AA	AB	AC	AG	B	BA	BB	C	H	HA	HD	K	L	LA	LC	M	N	P	S	Z	T	U	X
2.ZKI 355	Mk, M, Md	2	FF 740	**610**	140	750	735	403	**560**	140	660	**254**	**355**	35	945	Ø28	1463	25	1618	**740**	**680**	**800**	Ø24	**8**	**6**	Ø70	90
	Lk, L, Ld			**630**	150	780			**800**	220	980	**200**				Ø35	1794		1949								
	Mk, M	4,6,8		**610**	140	750			**560**	140	660	**254**				Ø28	1533		1758								
	Md																1651		1876								
	Lk, L, Ld			**630**	150	780			**800**	220	980	**200**				Ø35	1864		2089								

Type		Pole	D	DA	DB	DC	E	EA	F	FA	GA	GC
2.ZKI 355	Mk, M, Md	2	**75**	75	M20	M20	**140**	140	**20**	20	**79.5**	79.5
	Lk, L, Ld											
	Mk, M	4,6,8	**100**	100	M24	M24	**210**	210	**28**	28	**106**	106
	Md											
	Lk, L, Ld											

The dimensions given in bold figures are obligatory according to the recommendation of IEC. All other technical data and dimensions during the future development of motors may undergo some changes and therefore they can be considered as obligatory after our confirmation only. All dimensions are given in millimetres.

Motor dimensions

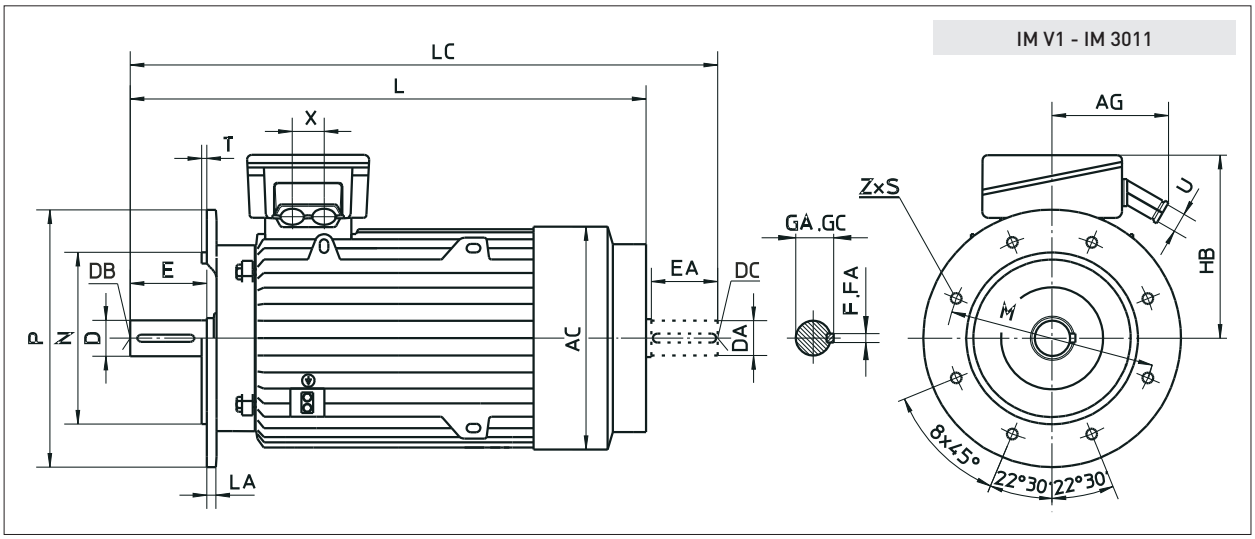

Type		Pole	Flange	AC	AG	D	DA	DB	DC	E	EA	F	FA	GA	GC	HB	L	LA	LC	M	N	P	S	Z	T	U	X
	Mk, M, Md	2				**75**	75	M20	M20	**140**	140	**20**	20	**79.5**	79.5		1463		1618								
	Lk, L																1794		1949								
2.ZKI 355	Mk, M		FF 740	735	403											590	1533	25	1758	**740**	**680**	**800**	**Ø24**	**8**	**6**	Ø70	90
	Md	4,6,8				**100**	100	M24	M24	**210**	210	**28**	28	**106**	106		1651		1876								
	Lk, L, Ld																1864		2089								

The dimensions given in bold figures are obligatory according to the recommendation of IEC. All other technical data and dimensions during the future development of motors may undergo some changes and therefore they can be considered as obligatory after our confirmation only. All dimensions are given in millimetres.

14 Main characteristics

STANDARDS AND REGULATIONS

- IEC 60034-1 Rating and performance
- IEC 60034-2 Methods for determining losses and efficiency
- IEC 60034-5 Degree of mechanical protection
- IEC 60034-6 Methods of cooling
- IEC 60034-7 Mounting arrangements
- IEC 60034-8 Terminal markings
- IEC 60034-9 Noise limits
- IEC 60034-11 Built-in thermal protection
- IEC 60034-12 Starting performances
- IEC 60034-14 Mechanical vibrations, limit values
- IEC 60034-17 Converter fed induction motors
- IEC 60038 IEC standard voltage
- IEC 60072-1 Mounting dimensions
- IEC 60085 Insulation material classification
- IEC 60721 Suitability for climate groups

The motors carry CE mark as a sign of product conformity to the requirements of all applicably directives of European Union, especially concerning safety, life and health protection, environment protection and consumer protection:

- Low Voltage Directive 73/23/EEC, modified by 93/68/EEC;
- Electromagnetic Compatibility Directive: 89/336/EEC, modified by 92/31/EEC;
- Machinery Directive 89/392/EEC modified by 91/368/EEC, 93/44/EEC and 93/68/EEC.

Quality assurance system of the SEVER motor factories is certified according to the international standard ISO 9001.

VOLTAGE AND FREQUENCY

The motors are designed for rated supply voltage 3x400 V ±10%, 50Hz according to IEC 60038. Motors up to 1.5 kW are connected in star (Y) and above that in delta (Δ) connection. On a special request motors can be designed for other voltages and winding connections up to 690 V.

However, motors with a 50 Hz winding can be used with 60 Hz system but with appropriate variations in performance and electrical parameters.

OUTPUT

Rated motor outputs given in the performance data tables refers to continuous running duty (S1) at rated voltage, rated frequency and maximum ambient temperature of 40°C. Motors for special operating conditions (temperature above 40°C, altitude above 1000 m ASL, frequent starting, load torque starting, driving heavy flywheel masses etc.) are available on a special request.

SPEED

Rotation speed given in the performance data tables refers to the rated load at rated voltage and frequency. According to IEC 60034-8 the internal connection of each machine to its own terminals is for clockwise direction of rotation from the drive side.

MECHANICAL DESIGN AND MOUNTING ARRANGEMENTS

The main mounting motor parts and the basic materials used in design are shown in the following table:

Motor parts	Frame size														
	63	71	80	90	100	112	132	160	180	200	225	250	280	315	355	400
Stator frame	Aluminum alloy						Cast iron								Steel	
End shield B3	Aluminum alloy						Cast iron								Steel	
Flange B5	Cast iron														Steel	
Flange B14	Cast iron						Not available									
Feet	Cast on			Bolted				Cast on[1]							Weld.	
Fan cover	Steel											Al. alloy[2]			Steel	
Fan	Polypropylene											Al. alloy[3]			Steel	

[1] Only 1. ZKI 315 bolted, [2] Only 1. ZKI 315 steel made,

[3] Only 1. ZKI 315 steel made

The motors are designed for three basic mounting arrangements: IM B3 (IM1001), IM B5 (IM3001) and up to frame size 112 for IM B14 (IM3601). All mounting arrangements are in accordance with the IEC 60034-7.

MECHANICAL PROTECTION

The motors are built with IP55 degree of mechanical protection meaning that they are protected against penetration of water jet and dust. The terminal box is built with the same protection degree - IP55.

TOLERANCES

All mechanical dimensions of electrical motors are in accordance with the IEC 60072-1 which also indicates allowed tolerances.

The main mounting dimension tolerances are shown in the following table:

Term	Designation	Dimension	Tolerance
Shaft extension diameter	D, DA	≤ 28 mm	j6
		> 28 mm	k6
		> 50 mm	m6
Flange spigot diameter	N	< 450 mm	j6
		> 450 mm	h6
Flange pitch diameter	M	≤ 200 mm	± 0.25 mm
		> 200 mm	± 0.50 mm
		> 500 mm	± 1.00 mm
Foot fixing dimensions	A. B	≤ 250 mm	± 0.75 mm
		> 250 mm	± 1.00 mm
		> 500 mm	± 1.50 mm
Shaft height	H	≤ 250 mm	- 0.50 mm
		> 250 mm	- 1.00 mm

Main characteristics

All electrical tolerances for rated values and performance are in accordance with the IEC 60034-1, and are shown in the following table:

Term	Designation	Dimension	Tolerance
Efficiency	η	$P_N \leq$ 50 kW $P_N >$ 50 kW	- 0.15 (1-η) - 0.10 (1-η)
Power factor	cosφ		$-\frac{1-\cos\varphi}{6}$, Min 0.02, Max 0.07
Slip	s	$P_N <$ 1 kW $P_N \geq$ 1 kW	± 30 % ± 20 %
Locked rotor current	I_1		+ 20 %
Locked rotor torque	T_1		- 15 % + 25 %
Break down torque	T_b		- 10 %
Moment of inertia	J		± 10 %

TERMINAL BOX

The motors up to frame size 112 are designed with terminal box on the top. From the frame size 132 up to 315 the motors are designed with right hand side (RHS) terminal box, left hand side (LHS) and top mounted terminal box are available on request. Motors type 1.ZKI 315 are designed with terminal box on the top - LHS or RHS position on request. 2.ZKI motors are available with top mounted terminal box only.
Terminal markings are in accordance with the IEC 60034-8. The main terminal box data are shown in the Table 2, page 17.

ROTOR AND SHAFT EXTENSION

The rotors are cage type, normally designed with one free cylindrical shaft extension. Second shaft extension, taper shaft extension and other special shaft extensions are available on a request. The dimensions of shaft extension, key and keywey are in conformity with the IEC 60072. In order to keep load of bearings and of shaft extension within allowed limits, there must be paid attention to radial and axial forces and to the type of transmission from a motor to a working machine.

BEARINGS

The design of the end shields and selected bearings provides quiet and long-term motor operation. The nominal bearing life of the motors with horizontal arrangements and normal conditions of use, is at least 40.000 hours. The bearings are shown in the Table 1, page 17.

LUBRICATION

The bearings for motors up to frame size 160 are lubricated for life and regreasing is not possible. For frame sizes 180, 200 and 225 the bearings are lubricated by the motor manufacturer and cannot be relubricated without deassembling of the motor end shields. The motors from frame size 250 up to 400 are fitted with regreasing device.

The type of grease, grease quantity and regreasing time are imprinted to the rating plate. Full range data are shown in the Table 1, page 17.

COOLING

The motors are surface cooled with self circulation. The type of cooling is IC 411, according to the IEC 60034-6. The cooling is performed by fan located on non drive side of the motor and protected by fan cover. All the motors up to frame size 200 have fans made of polypropylene. For all other frame sizes fans are made of aluminum alloy except for frame size 355 and 400 which are made of steel.

WINDING INSULATION

The motor windings are designed with insulation in class "F". This system of insulation is suitable for temperature rise limit of 105 K but motors of this catalogue meet temperature rise requirements of the insulation in class "B" (80 K) under the normal conditions of use.

VIBRATIONS AND BALANCING

The rotors are balanced dynamically with half key to vibration severity grade N (standard) in accordance with the IEC 60034-14. The limits of vibration severity are shown in the following table:

Grade	Limits of vibration severity in mms^{-1} (effective) for frame size H in mm				
	Speed range min^{-1}	Free suspension			
		56<H≤132	132<H≤225	255<H≤400	H>400
N	≥600≤3600	1.80	2.80	3.50	3.50
R	≥600≤1800	0.71	1.12	1.80	2.80
	>1800≤3600	1.12	1.80	2.80	2.80
S	≥600≤1800	0.45	0.71	1.12	-
	>1800≤3600	0.71	1.12	1.80	-

Vibration severity grade "R" or "S" available on a request

OVERLOAD CAPACITY

According to the IEC 60034-1, motors can be overloaded meaning that motors heated to an operating temperature can withstand current equal to 1.5 times the rated current for not less than 2 minutes. The same way, they can be overloaded by the torque 1.6 times the rated one for 15 seconds without stalling or abrupt in speed.

TORQUE CLASS

Motors of this catalogue and their characteristics of the starting torque are type "H", according to the IEC 60034-12. The motors are classified on the basis of torque class as follows: KR 10, KR 13 and KR 16. The motors of torque class KR 10 provide safe direct starting with torque load of 100 %, KR 13 with 130 % and KR 16 with 160 % of rated torque.

THERMAL PROTECTION

On a special request stator winding of the motor can be protected from overheating by using PTC thermistors. In order to protect all the windings of the motor one PTC thermistor is embedded in each phase of the winding. The PTC thermistors are connected in series and two ends of such connection are led out in the terminal box. These two ends have to be connected to the control unit. Besides, the motors can be equipped with additional thermistors for alarm.

HEATERS

As a protection against condensed water the motors can be equipped with heaters. During the motor stand still the heaters must be switched on. The power and supply voltage of the heating elements are shown in the following table:

Frame size H, mm	Supply voltage V	Heater's power P_g, W
71-80	115 ili 230	8
90-112		25
132-160		40
180-250		80
280-315		130
355		200
400		280

NOISE

The motors satisfy the noise level emission in accordance with the IEC 60034-9. The noise levels shown in the following table refer to a no load motor, 400 V, 50 Hz, cooling type IC 411 and protection IP55. Tolerance is + 3dB (A).

Noise levels dB (A)		Frame size														
		63	71	80	90	100	112	132	160	180	200	225	250	280	315	355
2 pole	LpfA[1]	45	58	62	65	71	73	78	80	78	85	82	75	84	85	85
	LwA[2]	56	69	73	77	83	85	90	94	92	98	96	89	98	99	99
4 pole	LpfA	42	41	50	52	55	60	62	65	73	71	74	77	79	84	85
	LwA	53	52	61	64	67	72	74	78	87	84	88	92	94	98	99
6 pole	LpfA	-	39	46	51	59	58	71	66	61	67	72	69	68	75	85
	LwA	-	50	57	63	71	70	83	78	75	81	86	83	82	89	99
8 pole	LpfA	-	37	45	51	52	55	57	62	64	64	71	63	61	80	82
	LwA	-	48	56	63	64	67	69	74	77	77	86	75	74	94	96

[1] - LpfA - Sound pressure, [2] - LwA - Sound power

CONVERTER FED MOTORS

The motors are suitable for operation by electronic converters since the winding insulation of the motors endures certain voltage overloading. Generally, motors operated by converters have higher level of losses, vibrations and noise. So, during the motor operation performed from converter it is necessary to de-rate the motor, depending on speed range, torque-speed characteristics of the load, type of cooling and type of converter. Therefore when placing an order note that the motor will be operated by converter.

FINISH PAINTING

Standard finish painting of the motors is performed by protective alkyd paint (RAL 5010). For special climate conditions, according to IEC 60721-2-1, painting is performed by epoxy paint.

PACKING

The motors of frame size 63 up to 132 are packed in individual cardboard boxes while the motors of frames 160 and bigger are packed in wooden crates.

In order to prevent damaging of the bearings during the motor transportation and from excessive vibrations during the motor stand still, the motors of frame size 160-400 are equipped with special rotor blocking system.

QUESTIONNAIRE

Please, answer the questions from the attached questionnaire as fully as possible, to enable offering motors which will satisfy your requirements the best.

TABLE 1. - BEARINGS

Motor type	Drive end	Opposite end		Grease		Grease quantity		Regreasing period, h			
				Insulation class				Number of poles			
		Horizontal design	Vertical design	B, F	H	g	cm^3	2	4	6	8,10,12
1.ZK 63	6002 2Z C3	6002 2Z C3		For life lubricated							
1.ZK 71	6203 2Z C3	6203 2Z C3									
1.ZK 80	6204 2Z C3	6204 2Z C3									
1.ZK 90	6205 2Z C3	6205 2Z C3									
2.ZK 100	6206 2Z C3	6206 2Z C3									
2.ZK 112	6206 2Z C3	6206 2Z C3									
1.ZK 132 M, S	6208 2Z C3	6208 2Z C3									
1.ZK 160 M, L	6210 2Z C3	6210 2Z C3									
1.ZK 180 M, L	6310 C3	6310 C3		Lithium based grease	Silicon based grease	Without regreasing device		10000	11500		
1.ZK 200 L	6312 C3	6312 C3							20000		
1.ZK 225 M, S	6313 C3	6313 C3									
1.ZK 250 M	6314 C3	6314 C3				27	34	2000	5400	7400	8500
1.ZK 280 M, S 2p=2	6216 C3	6216 C3				19	24	2000	-	-	-
1.ZK 280 M, S 2p=4,6,8	NU 216							-	2000/ 5400	3900/ 7400	5300/ 8500
1.ZK 315 M, S 2p=2	6217 C3	6217 C3				22	28	1800	-	-	-
1.ZK 315 M, S 2p=4,6,8	NU 217							-	1800/ 5000	3600/ 7000	5000/ 8300
1.ZKI 315 M 2p=2	6317 C3	6317 C3	7317 B			37	46	1400	4400	6500	7800
1.ZKI 315 M 2p=4,6,8	6319 C3	6319 C3	7319 B			45	56	-	3900	5900	7200
2.ZKI 355 M, L 2p=2	6317 C3	6317 C3	7317 B			37	46	1400	-	-	-
2.ZKI 355 M, L 2p=4,6,8	6322 C3	6322 C3	7322 B			60	75	-	3100	5000	6500
2.ZKI 400 L 2p=2	6319 C3	6319 C3	7319 B			45	56	1100	-	-	-
2.ZKI 400 L 2p=4,6,8	6324 C3	6322 C3	7322 B			72/ 60	90/ 75	-	2700/ 3100	4700/ 5000	6100/ 6500

Table 2. - Terminal box

Motor type	Number of terminals	Terminal stud thread	Maximal permissible current, A	Number of entries	Dimension of entries	Max. cable diameter mm	Terminal box position
1.ZK 63	6[1]	M4	16	2	M20 x 1.5	13	Top mounted only
1.ZK 71							
1.ZK 80							
1.ZK 90					M25 x 1.5	17	Top mounted [2]
2.ZK 100							
2.ZK 112							
1.ZK 132		M5	25		M32 x 1.5	21	Right hand side (left hand side and top position on request)
1.ZK 160		M6	63		M40 x 1.5	28	
1.ZK 180							
1.ZK 200		M8	100		M50 x 1.5	35	
1.ZK 225							
1.ZK 250		M10	160				
1.ZK 280							
1.ZK 315		M12	250		M63 x 1.5	48	
1.(2.)ZKI 315 Mk, M, Md		M16	315		M63 x 1.5	56*	Top mounted [2]
2.ZKI 315 Lk, L					M75 x 1,5	58*	
2.ZKI 355 Mk, M		M16	315		M75 x 1,5	58*	Top mounted only
2.ZKI 355 Md		M20	630		M75 x 1,5	58*	
2.ZKI 355 Lk, L, Ld	12	M16	730		M80 x 2	64*	
2.ZKI 400				4	M80 x 2	64*	

Note: [1]- 12 terminals available on a request., [2]- Right or left hand side on a request.

* - Cable Glands - metalic, Terminal box with front plate for entries

QUESTIONNAIRE FOR THE OFFER OF ASYNCHRONOUS ELECTRIC MOTORS

ATB SEVER
Technology in Motion

Enquiry Number:

Customer: ITEM: Qty:

A MOTOR DATA

1 Motor type: Three phase: Single phase:
2 Rotor type: Squirrel cage: Slip-ring:
3 Rated output: P_N= kW
4 Rated voltage: U_N= V Connect: Star Delta
5 Rated frequency: f_N= Hz
6 Rated speed: n_N= rpm
7 Insulation class: F B
8 Duty type: S1 S2 S3 S4 S5 S6 S7 S8 S9 S10
ED %
starts /h min J_{mot} kgm^2
9 Standard: IEC or
10 Cooling method: IC
11 Mounting arrengement: IM
12 Protection degree: Motor IP: Terminal box IP:
13 *Sense of rotation: Left Right Both
14 Motor brake: yes no
Braking moment: Nm
Brake voltage: V/Hz V,DC
15 No-load regime? (single phase motor) yes no
16 Rotor data: U_{2c}= V I_{2n}= A

B DATA ABOUT THE DRIVEN MACHINE

1 Type:
2 Required power:
3 Required speed:
4 Load torque characteristic:
Constant: Squared or
Speed %: 0 25 50 75 100
Torque Nm:
5 Moment of inertia: J= kgm^2
6 Running machine special data:

C AMBIENT CONDITIONS

1 Ambient temperature: C
2 Relative humidity: %
3 Altitude (above sea level): m
4 Specific ambient conditions:

D POWER TRANSMISSION AND STARTING CONDITIONS

1 Coupling type:
2 Starting:
3 Number of consecutive startings:
Hot state: per hour per day
Cold state: per hour per day

E ADDITIONAL REQUESTS FOR MOTOR EXECUTION

1 Overloading from: % P_N
Duration: min
2 Temperature rise: F B
3 Request for: vibration level mm/s
noise level db
4 *Terminal box position:
left right On top
5 Additional shaft loading sense
axial force radial force
6 Converter feed operation: yes no
Converter type:
Manufacturer:
Speed range: from to rpm
7 Sensor category (mark in lower field):
Taho gen. Encoder Absolute Resolver
Sensor Type:
8 Flange size: mm
9 Second shaft end: yes no
DA= mm EA= mm
10 Other requests and limits:

F ADDITIONAL EQUIPMENT, SPARE PARTS AND DOCUMENTATION

1 Thermal protection: yes no
Type:
2 Bearings thermometers yes no
3 Anti-condesation heaters yes no
4 Spare parts yes no
5 Guarantee sheet yes no
6 Language of instruction list:
7 Other requests for packing:

H CUSTOMER

1 Company:
2 Adress:
3 City:
4 Country:
5 Person:
6 Telefon / Telefax:
7 e-mail:

You are kindly requested to provide us with as much data as possible thus enabling us to offer satisfactorily

* OBSERVED FROM DRIVE END

Notes:

ATB Group - a global player

a company of **A-TEC** INDUSTRIES AG



















Company locations

Austria

Head office
ATB AUSTRIA ANTRIEBSTECHNIK AG
Hohenstaufengasse 7,
1010 Vienna
Phone: +43 1 90250-0
Fax: +43 1 90250-110
E-Mail: info@atb-motors.com
Http://**www.atb-motors.com**

ATB MOTORENWERKE GmbH
G.-Bauknecht-Straße 1,
A-8724 Spielberg
Phone: +43 3577 757-0
Fax: +43 3577 757-182
E-Mail: info@at.atb-motors.com

ATB TECHNOLOGIES GmbH
Millennium Park 11,
A-6890 Lustenau
Phone: +43 5577 9010 - 0
Fax: +43 5577 9010 - 110
E-Mail: info@at.atb-motors.com

Germany

ATB ANTRIEBSTECHNIK GmbH
Silcherstraße 74,
D-73642 Welzheim
Phone: +49 7182 14 - 1
Fax: +49 7182 14 - 590
E-Mail: info@de.atb-motors.com

ATB MOTORENTECHNIK GmbH
Helgoländer Damm 75,
D-26954 Nordenham
Phone: +49 4731 365 0
Fax: +49 4731 365 159
E-Mail: nordenham@de.atb-motors.com

France
ATB SELNI SAS
6 rue Louise Michel BP 24,
F-58028 Nevers Cedex
Phone: +33 3 86 93 42 00
Fax: +33 3 86 93 42 22
E-Mail: info@fr.atb-motors.com

Great Britain

ATB MORLEY Ltd.
Bradford Road, West Yorkshire,
LS28 6QA Leeds
Phone: +44 113 257 1734
Fax: +44 113 257 0751
E-Mail: sales@uk.atb-motors.com

ATB LAURENCE SCOTT LTD.
PO Box 25 Hardy Road,
NR1 1JD Norwich, Norfolk
Phone: +44 1603 628 333
Fax: +44 1603 619 788
E-Mail: admin@laurence-scott.com

Serbia

ATB SEVER a.d.
Magnetna polja 6,
24000 Subotica
Phone: +381 24 665 100, 665 200
Fax: +381 24 665 105
E-Mail: sever@rs.atb-motors.com

Czech Republic

ATB COMPONENTS S.R.O.
Lihovarská 1335/9,
CZ-71610 Ostrava - Radvanice
Phone: +420 5 962 333 40
Fax: +420 5 962 333 40
E-Mail: atb.bastro@quick.cz

ATB SEVER a.d.
Magnetna polja 6
24 000 Subotica
Serbia
Phone +381 24 665 124
Fax +381 24 665 125
www.atb-motors.com
sever@rs.atb-motors.com