Technical Documentation

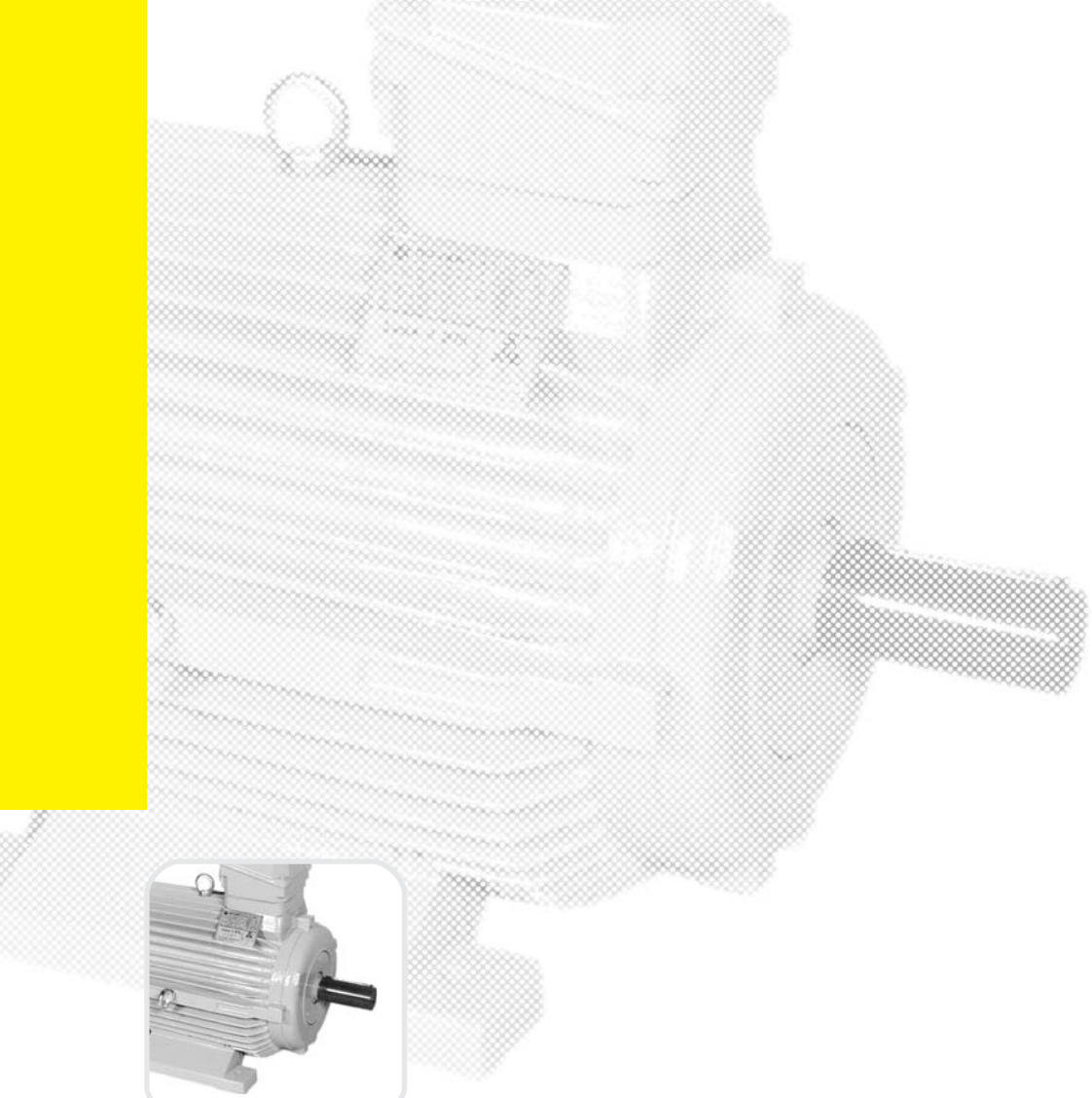



ELECTRIC MOTORS IN EXPLOSION - PROOF PROTECTION INCREASED SAFETY EExe FLAMEPROOF ENCLOSURE EExd

ATB SEVER
Technology in Motion

EX09EN

Vision



We set your ideas in motion. We do not merely manufacture motors, but instead turn the ambitious concepts of our customers into modern, innovative and reliable products, which are unique and point the way to the future. We bring our customers closer to their goals with reliability, creativity and flexibility.

Business Units



Serial Motors



New Businesses



Home Appliances

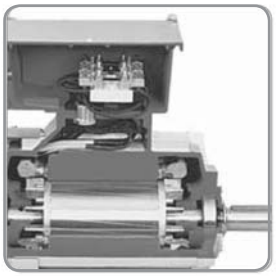

Project Motors

CONTENTS

CONTENTS **1**

1. GENERAL INFORMATION **2**

1.1 INTRODUCTION 2
1.2 DESIGNATION OF DESIGN 2
1.3 STANDARDS AND DIRECTIVES 3
1.3.1 Review of basic standards and directives 3
1.3.2 Release, hazardous areas and zones 4
1.3.3 Temperature classes and groups of gases 4
1.4 MECHANICAL CHARACTERISTICS 5
1.4.1 Mounting arrangements of electric motors 5
1.4.2 Shaft extension 6
1.4.3 Balancing and vibrations 6
1.4.4 Noise 6
1.4.5 Surface protection 6
1.4.6 Rating plates 6
1.5 ELECTRICAL CHARACTERISTICS 6
1.5.1 Voltage and frequency 6
1.5.2 Terminals and winding connection 7
1.5.3 Output 7
1.5.4 Overloading and starting 7
1.5.5 Insulation and heating 7
1.5.6 Inverter fed motors 7

2. MOTORS IN PROTECTION OF INCREASED SAFETY EExe **8**

2.1 EXPLOSION-PROOF PROTECTION OF INCREASED SAFETY EExe 8
2.2 DESIGN, TAKEOVER AND APPLICATION OF MOTORS IN PROTECTION EExe 8
2.2.1 Design 8
2.2.2 Overload protection 8
2.2.3 Application 9
2.2.4 Technical acceptance and certification 9
2.3 MECHANICAL DESIGN 9
2.3.1 Mechanical protection 9
2.3.2 Tabular review of constructional materials 9
2.3.3 Bearing arrangement 9
2.4 TECHNICAL DATA FOR SELECTION 11
2.6 PARTS 19

3. MOTORS IN PROTECTION OF FLAMEPROOF ENCLOSURE EExd **22**

3.1 EXPLOSION-PROOF PROTECTION FLAMEPROOF ENCLOSURE EExd 22
3.2 DESIGN 23
3.2.1 Forms, mechanical protection, constructional characteristics and materials of electric motor EExd 23
3.2.2 Terminal box and assembly drawings 23
3.2.3 Bearing arrangement 28
3.3 TECHNICAL DATA FOR SINGLE-SPEED MOTORS SELECTION 29
3.4 TECHNICAL DATA FOR TWO-SPEED MOTORS SELECTION 31
3.5 OUTLINE DRAWINGS 32
3.6 PARTS 40

4. QUESTIONNAIRE FOR EEx MOTORS **41**

1. GENERAL INFORMATION

1.1 INTRODUCTION

Explosion-proof tree-phase induction electric motors in this catalogue, refer to the design of increased safety - **EExe** and flameproof enclosure - **EExd**. These motors are applied in industrial plants, in which danger can occur from explosion of inflammable vapours or gases (e.g. chemical industry, petrochemical industry, oil refinery, textile industry) and also in mines, which are dangerous because of methane and inflammable dust.

Design ***increased safety is in conformity with standards*** EN 50014 and EN 50019 while the design **flameproof enclosure** is in conformity with EN 50014 and EN 50018.

1.2 DESIGNATION OF DESIGN

Designation of electric motors manufactured by ATB SEVER according to the mentioned designs is done as follows:

Design **increased safety - EExe**

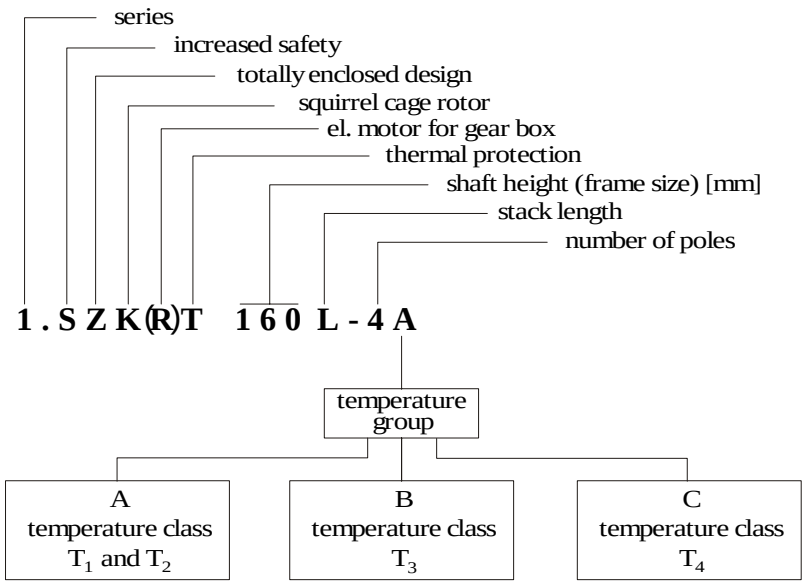

Design **flameproof enclosure - EExd**

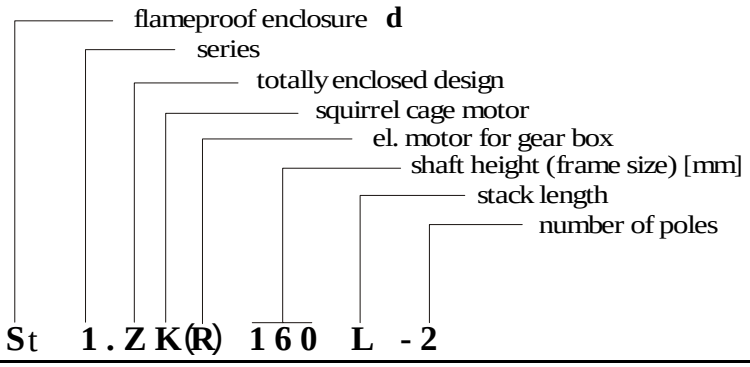

Marking Terminology to 94/ 9 / EC

EXAMPLE: CE 0539 Ex II 2 G and/or D

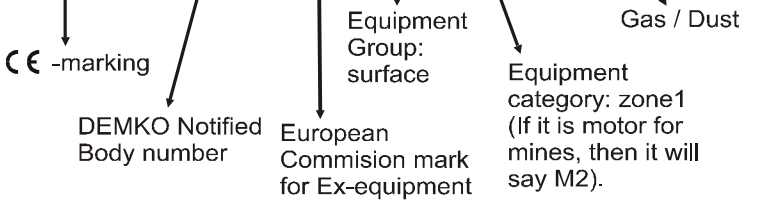

Reference EN 50014

1.3 STANDARDS AND DIRECTIVES

1.3.1 Review of basic standards and directives

Rotating electrical machines	International referent standards		National standards		
	IEC International Electrotechnical Commission	**EN-CENELEC European committee for el. tech.norms.**	**DIN/VDE- German industry norms- Association of German electric technicians**	**BS- British standards**	**CEI- Electrotechnical committee of Italy**
Rotating electrical machines, Rating and performances	IEC 60034,part 1 IEC60085	EN 60034-1	DIN EN 60034-1/ VDE 0530, part 1	BS 4999: P1 BS 4999: P69	CEI 2-3355
Methods for determining losses and efficiency	IEC 60034, part 2	EN 60034-2	DIN EN 60034-2/ VDE 0530, part 2	BS 4999-34	CEI2 -6
Degree of mechanical protection	IEC 60034, part 5	EN 60034-5	DIN EN 60034-5/ VDE 0530, part 5	BS 4999: P20	CEI 70-1519
Methods of cooling	IEC 60034, part 6	EN 60034-6	DIN EN 60034-6/ VDE 0530, part 5	BS 4999: P21	CEI 2/No-454
Mounting arrangements	IEC 60034, part 7	EN 60034-7	DIN EN 60034-7/ VDE 0530, part 5	BS 4999: P22	CEI-UNEL 05513
Terminal markings	IEC 60034, part 8	EN 60034-8	DIN/VDE 0530, part 8	BS 4999: P23	CEI 2-8V1 No 5628
Noise limits values	IEC 60034, part 9	EN 60034-9	DIN EN 60034-9/ VDE 0530, part 9	BS 4999: P51	Draft of Italian standard P288
Starting performances	IEC 60034, part 12	EN 60034-12	DIN/VDE 0530, part 12	——	——
Mechanical vibrations, limit values	IEC 60034, part 14	EN 60034-14	DIN/VDE 0530, part 14 DIN ISO 2373	BS 4999: P50	Draft of Italian standard P288
Mounting dimensions	IEC 60072	EN 60072	DIN 42673, part 3	BS 4999: P10	CEI-UNEL 13117
Electrical apparatus for explosive gas atmospheres - General provisions	IEC 60079, part 0	EN 50014	DIN EN 50014	BS 5501: P1	CEI 31-8459
Electrical apparatus for explosive gas atmospheres - Flame-proof enclosure EExd	IEC 60079, part 1	EN 50018	DIN EN 50018/ VDE 0171, part 5	BS 5501: P5	CEI 31-1472
Electrical apparatus for explosive gas atmospheres - increased safety EExe	IEC 60079, part 7	EN 50019	DIN EN 50019/ VDE 0171/ part 6	BS 5501: P6	——

The explosion-proof protection motors covered by the new Directive 94/9/EC must also meet the requirements of other relevant Directives: Low Voltage Directive 73/23/EEC, modified by 93/68/EEC; Electromagnetic Compatibility Directive 89/336/EEC, modified by 92/31/EEC and 93/68/EEC and Machinery Directive 98/37/EC.

1.3.2 Release, hazardous areas and zones

The source of release is the place which contains inflammable medium or from which the inflammable medium goes out. Inflammable medium is considered to be, as follows:

- the explosive mixture of gases, vapours and dust,
- medium-air mixture can make explosive atmosphere.

Regarding the way of formation and duration of explosive mixtures, sources of release are classified as permanent, primary and secondary sources of release.

Permanent sources of release contain or emit permanently inflammable medium or explosive mixture into the surrounding space.

Primary sources of release, occasionally, at normal operation, contain or emit inflammable medium or mixture into the surrounding space.

Secondary sources of release, only under abnormal circumstances, i.e. in case of damage of the plant or incorrect technological process, emit inflammable medium or mixture into the surrounding space.

The sources of release can be multi-stage, and in determining hazardous area every stage will be taken into consideration separately.

The hazardous area is the space in which explosive atmosphere is present or can be expected. Its presence in the certain quantity requires special measures of precaution, with regard to assembly performance and use of electric devices, tools, machines and accessories which sparks, make electric arc or have heated surfaces.

Classification by group and category for mining and surface industry is defined according corresponding Standards and Directives.

1.3.3 Temperature classes and groups of gases

In order to occur explosions the existing mixture must be ignited initially. For initial ignition its source must have enough power and temperature above the minimum temperature of ignition of this mixture. Gases and vapours are classified in the following temperature classes, on the basis of ignition temperature measured by a method and with a device in accordance with the corresponding standard.

Temperature class	Max. surface temperature
T1	450 ºC
T2	300 ºC
T3	200 ºC
T4	135 ºC
T5	100 ºC
T6	85 ºC

This standard provides data of group of gases, temperature classes, max. experimental safety gap, ignition temperature and ratio of minimal ignition current and minimal ignition current of laboratory methane, for 156 gases and vapours, which can form explosive mixtures. The most hazardous gases are: acetylene, hydrogen, carbon disulfide, are in the group C; ethylene, methyl acrylate, dimethyl ethane and some other gases are in the group B; while most of them are in the group A (methane, ethane, amyl-acetone, ammonia, benzol, butane, propane and masout).

1.4 MECHANICAL CHARACTERISTICS

1.4.1 Mounting arrangements of electric motors

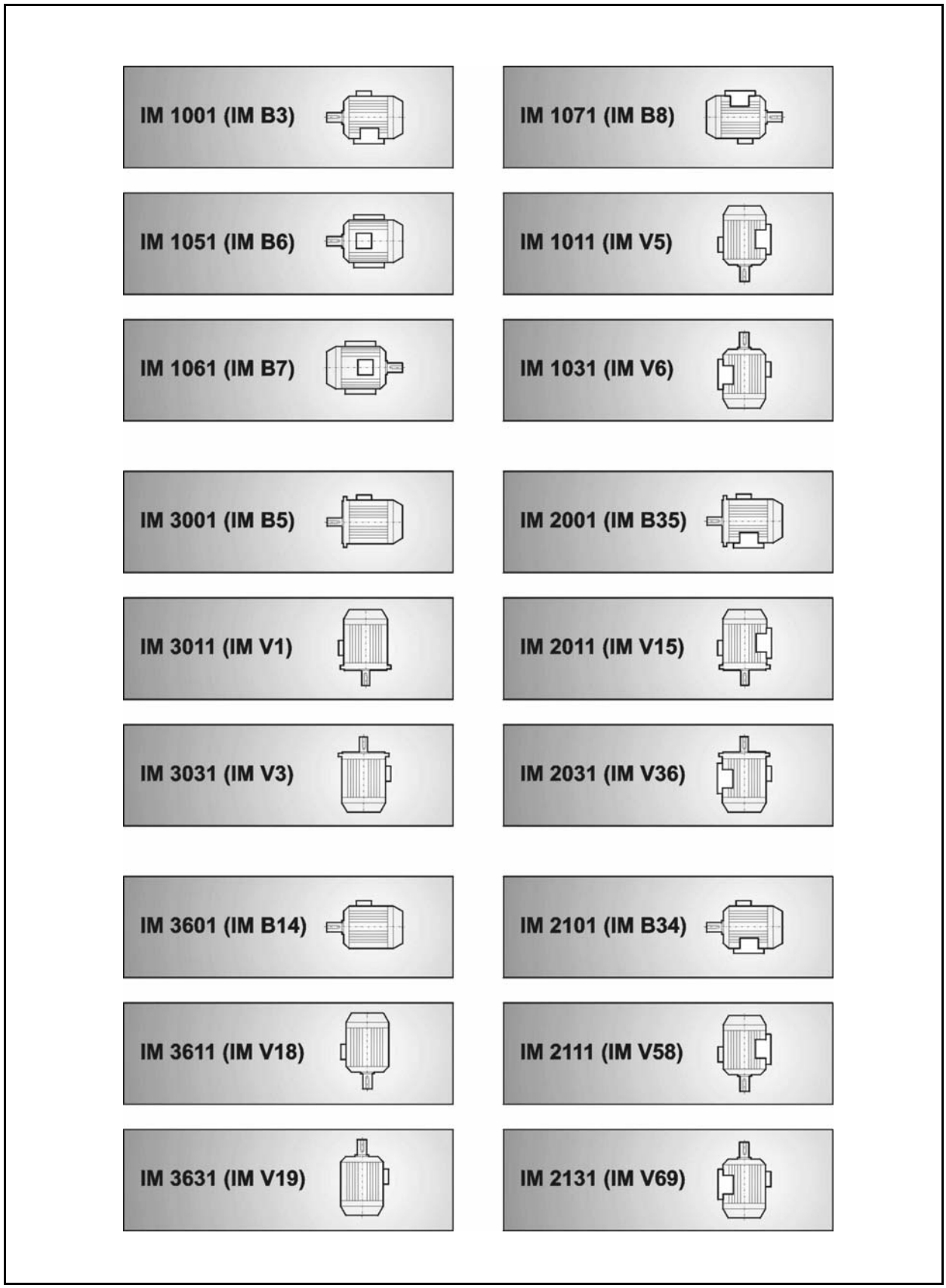

1.4.2 Shaft extension

Motors are manufactured with one cylindrical shaft extension. On a special request, they can be manufactured also with two shaft extensions, with a tape shaft extension and with other special forms. The dimensions of shaft extension, keys and keyway dimensions are in conformity with the IEC 60072-1. The dimensions of tapped hole in shaft are shown in the following table. In order to keep load of bearings and of shaft extension within the allowed limits, there must be paid attention to radial and axial forces and to the type of transmission from a motor to a working machine.

Tapped hole in shaft

Frame size	Drive side	Fan side
71	M5	M4
80	M6	M5
90	M8	M8
100	M10	M10
112		
132	M12	M12
160	M16	M16
180		
200	M20	M20
225		
250		
280		
315		

1.4.3 Balancing and vibrations

All motors are balanced dinamically with half key on a drive shaft extension in quality which corresponds to DIN ISO 2373. Measurement evaluation and limits of vibration are according to IEC 60034 part 14. The data are shown in the following table. Motors with vibration degree "R" (reduced) or "S" (special) are available on a special request.

Indicated speed [mms^{-1}]	Max. effective value of vibration speed for shaft height H [mm]			
	Machines measured in a state of free suspension			Rigid mounted
	$56 \leq H \leq 132$ [mm/s]	$132 < H \leq 225$ [mm/s]	$H > 225$ [mm/s]	$H > 400$ [mm/s]
$\geqslant 600 \leq 1800$	1,8	1,8	2,8	2,8
$> 1800 \leq 3600$	1,8	2,8	4,5	2,8

1.4.4 Noise

Motors satisfy the noise level emission in accordance to standard IEC 60034, Part 9.

1.4.5 Surface protection

Final surface protection of motor is performed by alkyd color, type RAL 7001. Motors for exploitation in special atmospheric conditions according to IEC 529 (EN 60529) are available on a special request.

1.4.6 Rating plates

Rated and inspection data are in the same rating plate fixed on the enclosure. A duplicate of the plate is located in the cover of the terminal box. The plates are made of stainless steel.

1.5 ELECTRICAL CHARACTERISTICS

1.5.1 Voltage and frequency

Motors are designed for rated voltage 400 V ±10%, 50 Hz according to IEC 60038. Motors up to 1,5 kW are connected in star (Y), and above that in delta (Δ). On a special request motors can be designed for other voltages as well, as it is shown in the following table, up to 690 V and for frequency from 42 to 60 Hz.

Voltage [V]	Frequency [Hz]
380 400 415 500	50
440 460 480	60

1.5.2 Terminals and winding connection

Motors are manufactured with six winding terminals which are marked as: U1, V1, W1, U2, V2, and W2. Stator winding are made in connection star (Y) for motors up to 1.5 kW and delta (Δ) for other motors. Motors in delta connection need special measures for motor protection.

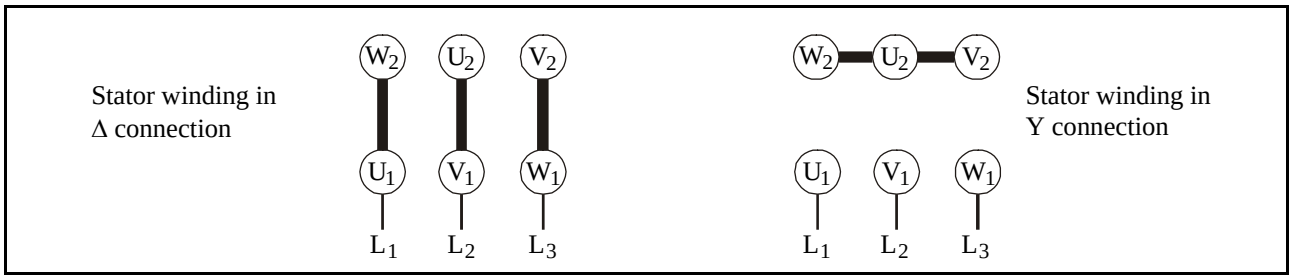

Two-speed motors with a speed ratio 2:1 are made with Dahlander windings, while the motors with a pole ratio 4/6 or 8/6 are made with two separate stator windings in star connection.

1.5.3 Output

The rated motor outputs, given in selection tables are for continuous running duty. This means that motors have to be connected to the network of rated voltage and frequency, while ambient temperature must not exceed 40 °C and the altitude must be up to 1000 m.

1.5.4 Overloading and starting

According to IEC 60034-1, motors can be overloaded, meaning that motors heated to an operating temperature can withstand current equal to 1.5 times the rated current for not less than 2 minutes. The same way they can be overloaded by the torque 1.6 times the rated one for 15 seconds without stalling or abrupt change in speed.

Overcurrent relays, which must be applied in conformity with the regulations for hazardous areas, allow limited starting time. This means that flywheel masses, which accelerate during start, are also limited.

1.5.5 Insulation and heating

Windings are designed with insulation of thermal class F. A motor temperature rise satisfies both thermal class B, which is 80 K over the maximum ambient temperature of 40^0C, and temperature class T4.

1.5.6 Inverter fed motors

Motors are suitable for operation by frequency inverter since the winding insulation of the motors endures certain voltage overloading. Generally, motors operated by inverters have higher noise level. During operation by inverter, the motors have additional load losses, which affect the output torque, depending on a speed ratio, characteristics of working machine, type of cooling (self-ventilated or an additional, external fan) and on the type of inverter, as well. Therefore when placing an order it is necessary to note that the motor will be operated by inverter. It is also necessary to define the speed ratio and characteristics of the working machine P=f(n) or M=f(n).

2. MOTORS IN PROTECTION OF INCREASED SAFETY EExe

2.1 EXPLOSION-PROOF PROTECTION OF INCREASED SAFETY EExe

Concerning electric motors in explosion-proof protection of increased safety "EExe" there have been taken measures, which prevent occurrence of sparking, electric arcs or excessive temperatures during operation of machine.

2.2 DESIGN, TAKEOVER AND APPLICATION OF MOTORS IN PROTECTION EExe

2.2.1 Design

Electric motors are in an enclosure which protects against penetration of dust, particles and other impurities. Besides the enclosure, protection is consisted of:

- good insulating material (non-hygroscopic, thermostable, mechanically strong, non-flammable, self-extinguishing and resistant to leakage currents)
- good mechanical protection (terminal box IP54, enclosure IP44)
- allowed heating in the limits of temperature class T1 - T4; insulation class F (H class on a special request)
- winding impregnation (vacuum system and submerging)
- expert supervision and handling

2.2.2 Overload protection

Basic protection against overloading is an overcurrent protecting device (e.g. a motor protection switch). Besides current control in normal operation in case of locked rotor, the protection device also has to disconnect a motor within time t_E, which is given in a rating plate of the motor. Triggering characteristics of a trigger or of a relay with thermal tensioning are based on the initial temperature of 20°C. The applied protecting device (trigger or relay) must have a suitable characteristics – current ratio/time, which provides time of disconnection in the function of the motor current ratio – I_P/I_N. In addition, the protection device must have the possibility of connecting / disconnecting currents higher than the locked-rotor current I_p. The current dependant protecting devices are effective only with continuous (non-intermittent) duty and normal starting conditions, which do not cause overheating. For difficult starting conditions and for intermittent duties, the special protecting devices must provide that limit temperatures are never exceeded (during starting, too). It is

A - the highest ambient temperature
B - temperature under rated load
C - limit temperature
t - time
ϑ - temperature
1 - temperature rise in operation under rated load
2 - temperature rise during locked-rotor testing

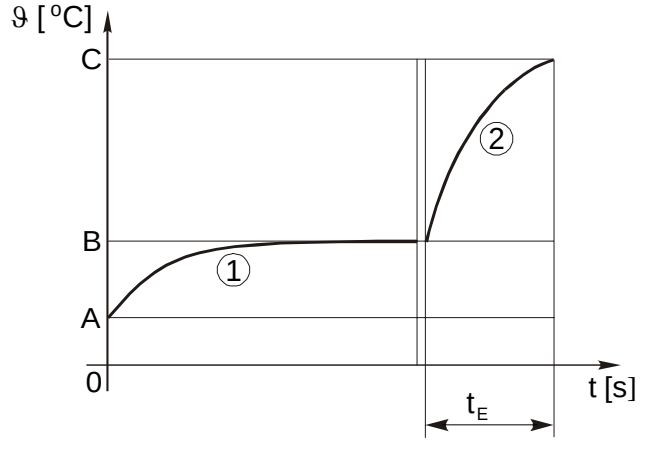

considered that there are difficult starting conditions, if a motor protecting device disconnects the motor before it reaches its rated speed. The t_E time taken for windings, when carrying the locked-rotor current I_p, to be heated up from the temperature reached in rated operation and at maximum ambient temperature to the limiting temperature. The t_E time is never less than 5 seconds. Appropriate protecting device to disconnect the motor within the t_E time is essential.

In case of difficult starting conditions, either motors of special design or double-stage overcurrent protection in combination with a relay for automatic control of speed and starting time are being used. Devices for direct control of winding temperature with sensors placed in the winding (e.g. PTC sensors) can also be applied,

but performance of such protection must be proved by testing together with a motor for all duty conditions (starting, continuous operation, disturbances, locked rotor). This is indicated in a suitable way.

In case of intermittent duty, heating is supervised by continuous secondary protection with two, three or more time constants, depending on the motor output.

2.2.3 Application

The motors can be applied in hazardous areas, where explosive atmosphere, such as mixtures of gases, fumes or vapour occur occasionally, but in accordance with temperature class rated in a motor rating plate. Valid technical regulations, which determine the installation of motor in hazardous areas, are to be paid attention.

2.2.4 Technical acceptance and certification

Technical acceptance and certification of motor in explosion-proof protection is performed according to defined procedures of authorized institutions and low regulations. ATB SEVER has certified its products both in the Yugoslav authorized institution - FEDERAL INSTITUTION for STANDARDIZATION, Belgrade, and in Danish authorized institution DEMCO, Denmark.

2.3 MECHANICAL DESIGN

2.3.1 Mechanical protection

Motors are designed in mechanical protection IP55 (IEC 60034-5 and EN 60034-5).

2.3.2 Tabular review of constructional materials

<table>
<tr><th rowspan="3">Frame size</th><th colspan="6">Constructional elements of electric motor</th></tr>
<tr><th rowspan="2">Stator frame</th><th rowspan="2">Feet</th><th rowspan="2">Stator cover</th><th rowspan="2">Fan cover</th><th colspan="2">Fan for both way rotation</th><th rowspan="2">Terminal box</th></tr>
<tr><th>2p=2</th><th>2p=4,6,8</th></tr>
<tr><td>71</td><td colspan="3" rowspan="4">Aluminium alloy</td><td rowspan="8">steel</td><td colspan="2" rowspan="5">polypropylene</td><td>together with frame</td></tr>
<tr><td>80</td><td rowspan="7">Aluminium alloy</td></tr>
<tr><td>90</td></tr>
<tr><td>100</td></tr>
<tr><td>112</td><td colspan="3" rowspan="8">cast iron</td></tr>
<tr><td>132</td></tr>
<tr><td>160</td><td colspan="2" rowspan="3">Aluminium alloy</td></tr>
<tr><td>180</td></tr>
<tr><td>200</td></tr>
<tr><td>225</td><td rowspan="3">Aluminium alloy</td><td colspan="2" rowspan="4">Aluminium alloy</td></tr>
<tr><td>250</td></tr>
<tr><td>280</td></tr>
<tr><td>315</td></tr>
</table>

2.3.3 Bearing arrangement

The technical solution of bearing arrangement provides even and long-term operation of a motor. Characteristics and dimensions of bearings are shown in the Table 1. on page 10.

Table 1. - Bearings

Type	Drive end	Opposite end		Grease for re-lubrication		Amount of grease		Time of re-lubrication [h]			
				Insulation class				Number of poles			
		Horizontal design	Vertical design	B, F	H	[g]	[cm^3]	2	4	6	8,10,12
1.SZK 63	6002 2Z C3	6002 2Z C3		For life lubricated							
1.SZK 71	6203 2Z C3	6203 2Z C3									
1.SZK 80	6204 2Z C3	6204 2Z C3									
1.SZK 90	6205 2Z C3	6205 2Z C3									
2.SZK 100	6206 2Z C3	6206 2Z C3									
2.SZK 112	6206 2Z C3	6206 2Z C3									
1.SZK 132 M, L	6208 2Z C3	6208 2Z C3									
1.SZK 160 M, L	6210 2Z C3	6210 2Z C3									
1.SZK 180 M, L	6310 C3	6310 C3		LITHIUM GREASE	SILICONE GREASE	No re-lubrication		10000	11500		
1.SZK 200 L	6312 C3	6312 C3							20000		
1.SZK 225 M, S	6313 C3	6313 C3									
1.SZK 250 M	6314 C3	6314 C3				27	34	2500	5900	10500	13000
1.SZK 280 M, S	NU 216	6216 C3				19	24	1400/ 2800	3500/ 7000	5200/ 10500	7000/ 12500
1.SZK 315 M, S	NU 217	6217 C3				22	28			4300/ 9500	6000/ 12000
SZK 315 M, S	6317 C3	6317 C3				37	46	1900	5500		

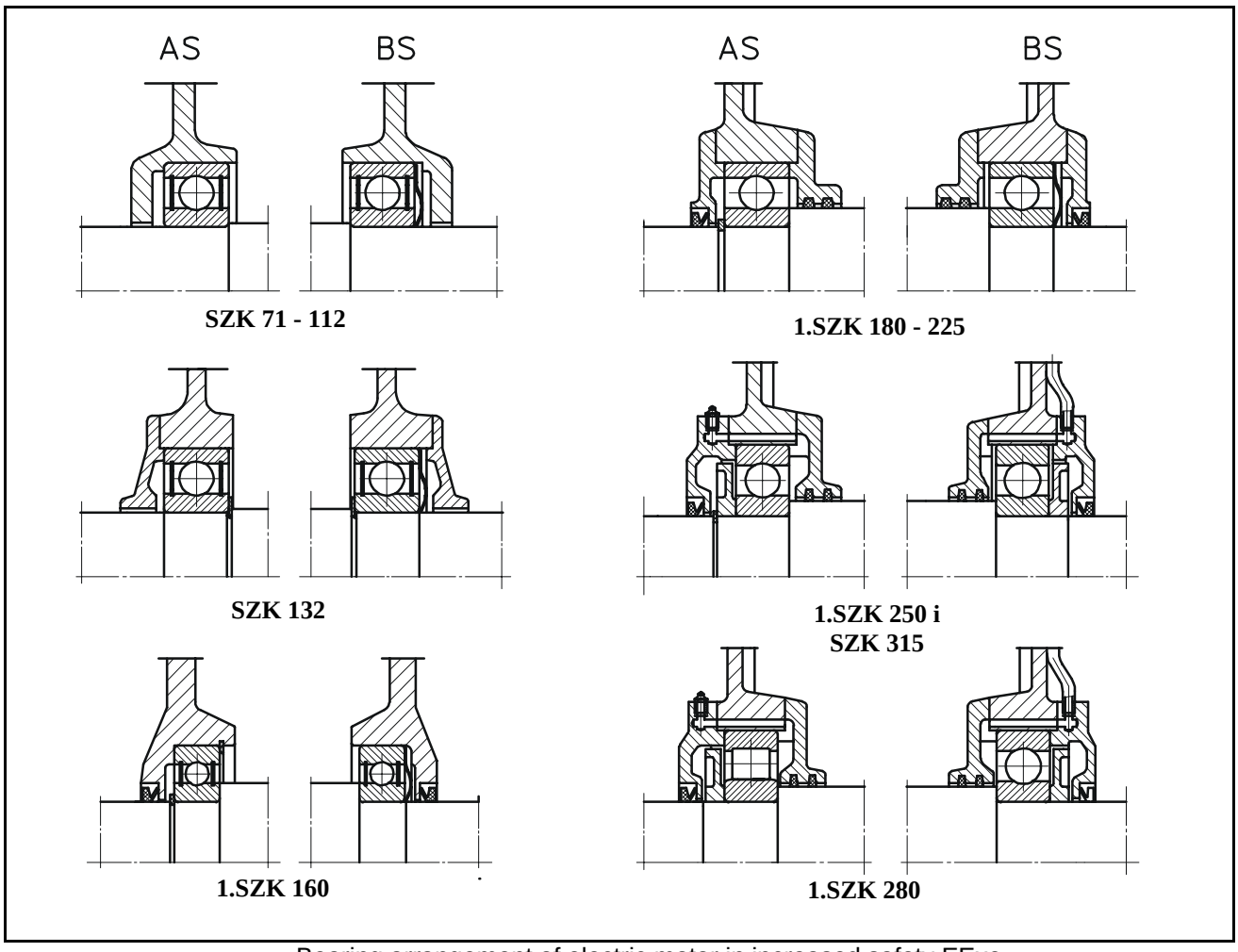

Bearing arrangement of electric motor in increased safety EExe

2.4 TECHNICAL DATA FOR SELECTION

3000 min^{-1}, 400 V, 50 Hz, Insulation class: F, Mechanical protection: IP 55, Temperature class: T1-T4.

Type		Output [kW]			n [min^{-1}]	η [%]	cos φ	I_N [A]	M_N [Nm]	$\frac{I_P}{I_N}$	$\frac{M_P}{M_N}$	$\frac{M_m}{M_N}$	t_E [s]			KR	J [kgm^2]	Mass [kg]
		T1,T2	T3	T4									T1,T2	T3	T4			
1.SZK 71	A-2A	0,37	0,37	-	2750	63	0,81	1,05	1,3	3,5	2,0	-	30	30	10	16	0,00023	5,4
	A-2B	0,32	0,32	0,32	2760	63	0,82	0,90	1,1	3,8	2,3	-	-		12	16	0,00023	5,4
	B-2A	0,55	0,55	-	2760	69	0,81	1,43	1,9	4,2	2,2	-	18	18	9	16	0,00033	6,3
	B-2B	0,42	0,42	0,42	2780	70	0,83	1,04	1,4	5,1	2,9	-	-	-	10	16	0,00033	6,3
1.SZK 80	A-2A	0,75	0,75	-	2770	72	0,80	1,87	2,6	4,8	2,3	-	20	20	9	16	0,00055	8,3
	A-2B	0,62	0,62	0,62	2775	73	0,82	1,49	2,1	5,8	2,8	-	-	-	12	16	0,00055	8,3
	B-2A	1,1	1,1	-	2770	73	0,84	2,58	3,8	4,7	2,3	-	18	12	6	16	0,00066	9,1
	B-2B	0,8	0,8	0,8	2775	74	0,85	1,84	2,	5,9	3,1	-	-	-	9	16	0,00066	9,1
SZK 90	S-2A	1,3	1,3	-	2880	76	0,83	2,97	4,3	6,1	2,4	3,2	20	20	-	16	0,00154	13,4
	S-2B	0,85	0,85	0,85	2905	77	0,83	1,92	2,8	6,6	2,7	3,2	25	25	14	16	0,00154	13,4
	L-2A	1,85	1,85	-	2900	80	0,82	4,07	6,1	7,0	2,8	3,2	13	13	-	16	0,00216	16,4
	L-2B	1,1	1,1	1,1	2915	79	0,82	2,45	3,6	7,2	3,0	3,6	24	24	14	16	0,00216	16,4
2.SZK 100	L-2A	2,5	2,5	-	2860	80	0,83	5,43	8,3	6,5	2,4	2,6	5	5	-	16	0,003	19
	L-2B	1,6	1,6	1,6	2920	80	0,70	4,12	5,2	7,8	3,0	3,1	-	-	5	16	0,003	19
2.SZK 112	M-2A	3,3	3,3	-	2885	84	0,86	6,60	10,9	7,6	3,2	3,3	10	10	-	16	0,005	24
	M-2B	2,2	2,2	2,2	2925	79	0,80	5,03	7,2	8,5	3,5	3,8	-	-	5	16	0,005	24
SZK 132	Sk-2B	4,6	4,6	-	2900	82	0,94	8,6	15,2	7,1	2,0	2,5	10	10	-	16	0,097	55
	Sk-2C	-	-	3,3	2905	82	0,93	6,2	11	7,4	2,2	2,6	19	19	11	16	0,097	55
	S-2A	6,5	-	-	2900	82,5	0,94	12	21,4	7,3	2,1	2,6	9	-	-	16	0,02	61,5
	S-2B	-	5,5	-	2900	82,5	0,94	10,3	18,1	7,4	2,1	2,6	9	9	-	16	0,02	61,5
	S-2C	-	-	4	2905	83	0,93	7,5	13,1	7,5	2,3	2,8	18	18	10	16	0,02	61,5
1.SZK 160	Mk-2A	9,5	-	-	2880	84,5	0,92	17,7	31,5	8,0	2,5	2,3	7	-	-	13	0,021	89
	Mk-2B	-	7,5	-	2900	85	0,92	14,7	24,6	7,4	2,8	2,6	7	7	-	16	0,021	89
	Mk-2C	-	-	5	2910	85	0,93	9,2	16,4	7,7	2,6	2,4	-	-	7	13	0,021	89
	M-2A	13	-	-	2890	85,5	0,92	24	43,0	8,2	2,5	2,5	6	-	-	13	0,028	108,5
	M-2B	-	10	-	2900	85,5	0,93	18,2	32,8	8,0	3,0	2,6	6	6	-	13	0,028	108,5
	M-2C	-	-	6,5	2910	85,5	0,93	11,8	21,2	7,8	2,8	2,6	-	-	6	13	0,028	108,5
	L-2A	16	-	-	2895	87	0,92	29	52,7	8,0	2,5	2,7	7	-	-	13	0,034	113
	L-2B	-	12,5	-	2900	86,5	0,93	22,5	41,1	7,7	3,1	2,6	6	6	-	13	0,034	113
	L-2C	-	-	8	2910	86,5	0,93	14,7	26,1	7,6	2,7	2,5	-	-	6	13	0,034	113
SZK 180	M-2A	19	-	-	2920	88,5	0,92	33,7	62,2	8,0	2,0	2,8	6,5	-	-	10	0,057	138
	M-2B	-	15	-	2930	88	0,92	26,8	48,2	8,5	2,1	3,0	-	6,5	-	10	0,057	138
1.SZK 200	Lk-2A	25	-	-	2935	90	0,87	46	81,4	6,5	1,7	2,5	10	-	-	10	0,11	199,5
	Lk-2B	-	20	-	2945	89,5	0,87	37,1	64,9	8,3	1,7	2,7	-	8	-	10	0,11	199,5
	L-2A	31	-	-	2940	90,5	0,88	56,2	100,7	6,6	1,7	2,5	10	-	-	10	0,13	215
	L-2B	-	24	-	2950	90	0,88	43,7	77,7	8,4	1,6	2,6	-	9	-	10	0,13	215
1.SZK 225	M-2A	38	-	-	2960	92,2	0,89	67	123	7,5	1,8	2,9	11	-	-	10	0,23	290
	M-2B	-	28	-	2960	91,5	0,89	50	90	7,8	1,8	2,9	14	10	-	10	0,23	290
1.SZK 250	M-2A	47	-	-	2965	92,5	0,90	81,5	151	7,5	1,8	2,9	13	-	-	10	0,36	395
	M-2B	-	36	-	2965	92,2	0,90	63	116	7,8	1,8	2,9	17	11	-	10	0,36	395
1.SZK 280	S-2A	64	-	-	2970	93	0,91	109	206	7,8	1,6	2,6	14	-	-	7	0,67	510
	S-2B	-	47	-	2970	92,8	0,91	81	151	8,2	1,7	2,6	17	13	-	7	0,67	510
	M-2A	76	-	-	2970	93,3	0,91	129	244	7,7	1,6	2,5	15	-	-	7	0,81	600
	M-2B	-	58	-	2970	93	0,90	100	187	8,0	1,6	2,5	16	13	-	7	0,81	600
SZK 315	S-2A	95	-	-	2981	93,5	0,92	159	304	7,7	1,4	2,7	16	-	-	7	1,55	810
	S-2B	-	68	-	2983	93,2	0,91	116	218	8,2	1,5	2,7	20	15	-	7	1,55	810
	M-2A	112	-	-	2982	94	0,92	187	359	7,8	1,3	2,7	15	-	-	7	1,8	890
	M-2B	-	80	-	2985	93,6	0,91	136	256	8,4	1,4	2,8	19	15	-	7	1,8	890

Note: Electric motors of frame size 355 and over on a special request !

1500 min^{-1}, 400 V, 50 Hz, Insulation class: F, Mechanical protection: IP 55, Temperature class: T1-T4.

Type		Output [kW]			n [min^{-1}]	η [%]	cos φ	I_N [A]	M_N [Nm]	$\frac{I_P}{I_N}$	$\frac{M_P}{M_N}$	$\frac{M_m}{M_N}$	t_E [s]			KR	J [kgm^2]	Mass [kg]
		T1,T2	T3	T4									T1,T2	T3	T4			
1.SZK 71	A-4A	0,25	0,25	0,25	1345	63	0,76	0,75	1,77	3,2	1,7	1,9	60	60	30	13	0,00038	5,3
	A-4B	0,22	0,22	0,22	1370	62	0,74	0,69	1,53	3,3	1,8	2,0	-	-	35	13	0,00038	5,3
	B-4A	0,37	0,37	0,37	1370	66	0,75	1,07	2,58	3,5	2,0	2,1	50	50	20	13	0,00055	6,3
	B-4B	0,32	0,32	0,32	1390	66	0,70	1,00	2,20	3,6	2,1	2,2	-	-	25	13	0,00055	6,3
1.SZK 80	A-4A	0,55	0,55	0,55	1375	69	0,76	1,51	3,80	3,5	1,8	1,9	34,5	31	8	13	0,0009	8,2
	A-4B	0,42	0,42	0,42	1410	73	0,65	1,28	2,84	3,6	1,9	2,0	-	-	10	13	0,0009	8,2
	B-4A	0,75	0,75	-	1375	71	0,75	2,02	5,20	3,7	2,0	2,1	22	22	10	13	0,0011	9,0
	B-4B	0,7	0,7	0,7	1375	72	0,74	1,90	4,86	3,9	2,2	2,3	-	-	12	13	0,0011	9,0
SZK 90	S-4A	1,0	1,0	-	1400	76	0,80	2,38	6,82	5,4	2,2	2,7	24	24	-	13	0,00247	13,2
	S-4B	0,8	0,8	0,8	1400	76	0,82	1,85	5,46	5,3	2,2	2,6	30	30	15	13	0,00247	13,2
	L-4A	1,35	1,35	-	1410	74	0,77	3,42	9,14	5,9	3,0	3,2	18	18	-	16	0,0034	16,9
	L-4B	1,2	1,2	1,2	1420	80	0,81	2,67	8,07	6,6	2,4	3,5	27	27	6	16	0,0034	16,9
2.SZK 100	L-4A	2,0	2,0	-	1410	78	0,78	4,75	13,55	5,9	2,4	2,8	10	10	-	16	0,0054	20,5
	L-4B	1,5	1,5	1,5	1435	78	0,65	4,27	9,88	5,6	2,8	2,9	-	-	5	16	0,0054	20,5
	Ld-4A	2,5	2,5	-	1410	75	0,77	6,27	16,93	6,2	2,7	2,9	10	10	-	16	0,0071	22,6
	Ld-4B	1,7	1,7	1,7	1440	75	0,62	5,28	11,27	6,4	2,7	2,9	-	-	5	16	0,0071	22,6
2.SZK 112	M-4A	3,6	3,6	-	1430	80	0,78	8,33	24,04	6,5	2,9	3,2	5	5	-	16	0,013	28,4
	M-4B	2,4	2,4	2,4	1450	79	0,70	6,26	15,81	5,7	2,3	2,6	-	-	5	16	0,013	28,4
SZK 132	S-4A	5	-	-	1445	86,5	0,84	10,0	33,0	6,0	2,1	2,7	12	-	-	16	0,035	61,5
	S-4B	-	5	-	1445	86,5	0,84	10,0	33,0	6,0	2,1	2,7	12	12	-	16	0,035	61,5
	S-4C	-	-	3,5	1450	86,5	0,83	7	23,0	5,9	2,0	2,6	17	17	8	16	0,035	61,5
	M-4A	6,8	-	-	1445	87,0	0,85	13,3	45,0	6,0	2,2	2,8	14	-	-	16	0,045	73
	M-4B	-	6,8	-	1445	87,0	0,85	13,3	45,0	6,5	2,6	2,8	14	14	-	16	0,045	73
	M-4C	-	-	4,1	1450	87,0	0,84	8,1	27,0	5,9	2,0	2,6	21	21	10	16	0,045	73
1.SZK 160	M-4A	10	-	-	1445	86	0,81	20,5	66,8	7,3	3,2	3,6	8	-	-	16	0,055	89,5
	M-4B	-	10	-	1445	87	0,81	20,5	66,8	7,3	3,2	3,6	8	8		16	0,055	89,5
	M-4C	-	-	6,4	1450	87	0,83	12,8	42,6	7,0	3,3	3,7	22	22	6	16	0,055	89,5
	L-4A	13,5	-	-	1445	88	0,83	26,7	90,2	6,5	3,1	3,6	8	-	-	16	0,073	118
	L-4B	-	13,5	-	1445	88	0,83	26,7	90,2	6,5	3,1	3,6	8	8	-	16	0,073	118
	L-4C	-	-	8,5	1450	88	0,84	16,6	56,6	6,0	3,2	3,7	23	23	7	16	0,073	118
1.SZK 180	M-4A	17	-	-	1460	89	0,82	33,6	111	6,2	2,6	2,4	11	-	-	16	0,086	140
	M-4B	-	15	-	1465	89	0,82	29,7	98	7,0	2,9	2,7	-	10	-	16	0,086	140
	L-4A	20	-	-	1460	90	0,82	39,1	131	6,2	2,6	2,4	11	-	-	16	0,102	155
	L-4B	-	17,5	-	1465	90	0,82	34,2	114	7,0	2,9	2,7	-	10	-	16	0,102	155
1.SZK 200	L-4A	27	-	-	1460	90,7	0,88	49,0	175	6,2	2,3	2,3	12	-	-	16	0,27	230
	L-4B	-	24	-	1475	90,7	0,87	44,0	155	7,0	2,6	2,6	14	14	-	16	0,27	230
1.SZK 225	S-4A	33	-	-	1475	92	0,88	59,0	214	7,6	1,8	2,7	11	-	-	13	0,362	280
	S-4B	-	30	-	1480	92	0,87	54	194	8,4	2,0	3,0	-	11,5	-	13	0,362	280
	M-4A	40	-	-	1475	92,4	0,88	71	260	7,5	1,8	2,7	10	-	-	13	0,442	320
	M-4B	-	36	-	1480	92,4	0,87	65	233	8,3	2,0	3,0	-	11	-	13	0,442	320
1.SZK 250	M-4A	50	-	-	1480	92,5	0,89	88	323	6,4	2,2	2,6	7,5	-	-	13	0,64	385
	M-4B	-	44	-	1485	92,8	0,89	77	283	7,3	2,5	3,0	-	8	-	13	0,64	385
1.SZK 280	S-4A	68	-	-	1480	93,4	0,90	117	439	6,4	1,8	2,4	13	-	-	13	1,1	525
	S-4B	-	58	-	1485	93,5	0,88	102	373	7,5	2,0	2,8		16	-	13	1,1	525
	M-4A	80	-	-	1480	93,8	0,90	137	516	6,6	1,8	2,5	16		-	13	1,31	603
	M-4B	-	70	-	1485	94	0,88	122	450	7,5	2,0	2,8	-	18	-	13	1,31	603
SZK 315	S-4A	100	-	-	1488	94	0,90	188	611	5,8	1,6	2,3	12	-	-	13	3,5	840
	S-4B	-	84	-	1488	94	0,88	155	708	6,7	1,8	2,7	-	14	-	13	3,5	840
	M-4A	120	-	-	1488	94	0,90	220	975	5,8	2,0	2,2	12	-	-	13	3,875	915
	M-4B	-	100	-	1488	94	0,89	180	180	6,7	2,2	2,6	-	14	-	13	3,875	915

Note: Electric motors of frame size 355 and over on a special request !

1000 min^{-1}, 400 V, 50 Hz, Insulation class: F, Mechanical protection: IP 55, Temperature class: T1-T4.

Type		Output [kW]			n [min^{-1}]	η [%]	cos φ	I_N [A]	M_N [Nm]	$\frac{I_P}{I_N}$	$\frac{M_P}{M_N}$	$\frac{M_m}{M_N}$	t_E [s]			KR	J [kgm^2]	Mass [kg]
		T1,T2	T3	T4									T1,T2	T3	T4			
1.SZK 71	A-6A	0,18	0,18	0,18	900	57	0,65	0,70	1,9	2,6	1,9	2,0	95	80	25	13	0,00055	6,1
	B-6A	0,25	0,25	0,25	890	57	0,64	0,99	2,7	2,6	1,8	2,1	93	77	24	13	0,00071	6,8
1.SZK 80	A-6A	0,37	0,37	0,37	915	66	0,69	1,17	3,9	3,6	2,0	2,2	150	150	54	13	0,0018	9
	B-6A	0,55	0,55	0,55	915	68	0,66	1,77	5,7	3,7	2,4	2,5	74	74	26,5	13	0,0024	11,6
SZK 90	S-6A	0,65	0,65	0,65	935	66	0,69	2,06	6,6	4,7	2,6	3,0	23	23	23	16	0,00247	13
	L-6A	0,95	0,95	0,95	920	67	0,73	2,80	9,9	4,8	2,4	2,8	18	18	6	16	0,0034	16,3
2.SZK 100	L-6A	1,3	1,3	-	930	67	0,70	4,04	13,3	4,2	2,2	2,4	15	15	5	13	0,0054	20,5
	L-6B	1,2	1,2	1,2	940	67	0,66	3,90	12,2	4,4	2,5	2,7	-	-	7	13	0,0054	20,5
2.SZK 112	M-6A	1,9	1,9	-	920	78	0,76	4,63	19,7	4,8	2,5	2,9	10	10	-	16	0,012	27
	M-6B	1,6	1,6	1,6	930	78	0,72	4,11	16,4	5,2	2,9	3,3	-	-	7	16	0,012	27
SZK 132	S-6B	2,6	2,6	-	960	84	0,79	5,7	26	6,0	2,4	2,7	14	-	-	16	0,035	57
	S-6C	-	-	2,2	960	84	0,79	5,7	26	6,0	2,4	2,7	14	14	-	16	0,035	57
	Mk-6B	3,5	3,5	-	950	86	0,80	7,3	36	6,4	2,5	2,8	13	13	-	16	0,0425	68
	Mk-6C	-	-	3,0	950	86	0,80	6,3	30	6,6	2,7	3,1	14	14	6,5	16	0,0425	68
	M-6B	4,8	4,8	-	955	87	0,81	9,9	49	6,4	2,2	2,6	9	9	-	16	0,05	75,5
	M-6C	-	-	4,0	955	86	0,80	8,4	40	6,6	2,2	2,6	11	11	6	16	0,05	75,5
1.SZK 160	M-6B	6,6	6,6	-	950	84	0,78	14,5	66,4	6,5	2,0	2,4	16	16	-	16	0,049	90
	M-6C	-	-	5,0	950	84	0,78	11	66,4	6,7	2,1	2,5	30	21	5,5	16	0,049	90
	L-6B	9,7	9,7	-	950	86	0,78	21	97,5	6,9	2,2	2,5	15	-	-	16	0,070	120
	L-6C	-	-	7,0	950	86	0,78	15,2	97,5	7,3	2,3	2,6	15	8	6	16	0,070	120
1.SZK 180	L-6B	13,2	13,2	-	960	87,5	0,83	26,6	131	6,0	2,2	2,7	15	15	-	16	0,144	150
1.SZK 200	Lk-6B	16,5	16,5	-	970	89	0,83	32,3	163	6,5	2,0	2,7	14	14	-	13	0,225	205
	L-6B	20	20	-	970	90	0,83	39	197	6,5	2,0	2,7	11	11	-	13	0,27	230
1.SZK 225	M-6B	27	27	-	975	91	0,84	51,3	265	6,5	2,0	2,7	19	19	-	13	0,656	330
1.SZK 250	M-6B	33	33	-	980	91	0,85	65	322	6,3	2,0	2,2	16	15	-	13	0,90	390
1.SZK 280	S-6B	40	40	-	985	92,5	0,87	72	388	7,3	2,4	2,7	14	14	-	13	1,5	500
	M-6A	50	-	-	986	92,9	0,88	89	484	7,1	2,3	2,7	-	13	-	13	1,82	560
	M-6B	-	46	-	987	92,8	0,87	82	445	7,7	2,5	2,8	15	-	-	13	1,82	560
1.SZK 315	S-6A	68	-	-	987	92,6	0,86	123	658	7,7	2,4	2,9	19	-	-	13	2,7	730
	S-6B	-	64	-	988	92,7	0,86	116	619	8,2	2,6	3,1	-	13	-	13	2,7	730
	M-6A	82	-	-	986	93	0,88	145	794	7,6	2,3	2,9	18	-	-	13	3,18	840
	M-6B	-	76	-	988	93	0,87	136	735	8,2	2,5	3,1	-	13	-	13	3,18	840

750 min^{-1}, 400 V, 50 Hz, Insulation class: F, Mechanical protection: IP 55, Temperature class: T1-T4.

Type		Output [kW]			n [min^{-1}]	η [%]	cos φ	I_N [A]	M_N [Nm]	$\frac{I_P}{I_N}$	$\frac{M_P}{M_N}$	$\frac{M_m}{M_N}$	t_E [s]			KR	J [kgm^2]	Mass [kg]
		T1,T2	T3	T4									T1,T2	T3	T4			
1.SZK 71	A-8A	0,09	0,09	0,09	670	43	0,50	0,60	1,28	2,2	1,8	2,0	55	55	22	16	0,00055	6,1
	B-8A	0,12	0,12	0,12	680	46	0,50	0,75	1,68	2,0	1,9	2,2	25	25	13	16	0,00071	6,8
1.SZK 80	A-8A	0,18	0,18	0,18	680	55	0,55	0,86	2,53	2,8	2,2	2,5	30	30	15	16	0,0018	9
	B-8A	0,25	0,25	0,25	690	57	0,56	1,13	3,46	2,8	2,3	2,5	35	35	15	16	0,0024	11,6
SZK 90	S-8A	0,37	0,37	0,37	700	66	0,65	1,24	5,05	3,5	2,0	2,2	55	55	20	16	0,00247	13
	L-8A	0,5	0,5	0,5	700	69	0,67	1,56	6,82	4,0	2,8	2,8	75	75	50	16	0,0034	16,3
2.SZK 100	L-8A	0,65	0,65	0,65	700	64	0,62	2,36	8,87	3,7	2,0	2,4	20	20	10	13	0,0054	20,5
	Ld-8A	0,95	0,95	0,95	680	64	0,65	3,30	13,34	3,5	2,1	2,4	20	20	10	13	0,0071	22,6
2.SZK 112	M-8A	1,3	1,3	1,3	700	71	0,67	3,94	17,74	3,6	2,0	2,2	25	25	10	13	0,012	27
SZK 132	S-8B	1,9	1,9	-	705	78	0,70	5	25,7	4,5	1,6	2,2	16	16	-	13	0,035	54
	M-8AB	2,6	2,6	-	710	79	0,72	6,7	35,0	4,5	1,6	2,3	15	15	-	13	0,050	70,5
1.SZK 160	Mk-8B	3,5	3,5	-	710	78	0,68	9,5	47	4,5	1,9	2,2	14	14	-	13	0,037	87
	M-8B	4,8	4,8	-	710	80	0,68	12,8	64,5	4,6	1,9	2,2	12	12	-	13	0,053	91,5
	L-8B	6,6	6,6	-	710	82	0,69	16,8	89	4,6	1,9	2,2	11	11	-	13	0,076	122
1.SZK 180	L-8B	9,7	9,7	-	715	84	0,74	23	130	5,0	1,9	2,1	11	11	-	13	0,160	160
1.SZK 200	L-8B	13,2	13,2	-	720	87	0,73	30,5	175	5,0	1,8	2,2	10	10	-	13	0,225	205
1.SZK 225	S-8B	16,5	16,5	-	735	88,5	0,78	34,7	214	5,0	1,7	2,2	14	14	-	13	0,470	245
	M-8B	20	20	-	735	89,5	0,78	42	260	5,0	1,7	2,2	15	15	-	13	0,560	285
1.SZK 250	M-8B	27	27	-	735	90	0,80	54	351	5,0	1,6	2,2	10	10	-	13	0,870	370
1.SZK 280	S-8B	33	33	-	740	91,5	0,80	65	426	6,1	1,7	2,2	18	18	-	13	1,5	495
	M-8B	40	40	-	740	92	0,81	78	516	6,2	1,6	2,2	17	17	-	13	1,82	580
1.SZK 315	S-8B	50	50	-	740	92	0,82	96	645	6,5	1,7	2,4	16	16	-	10	2,56	750
	M-8B	68	68	-	740	92,5	0,83	128	877	6,2	1,5	2,3	15	15	-	10	3,32	870

Note: Electric motors of frame size 355 and over on a special request !

2.5 OUTLINE DRAWINGS

Type: **1.SZK**
Protection: **EExe**
Temperature class: **T1 - T4**

IM B3 - IM 1001

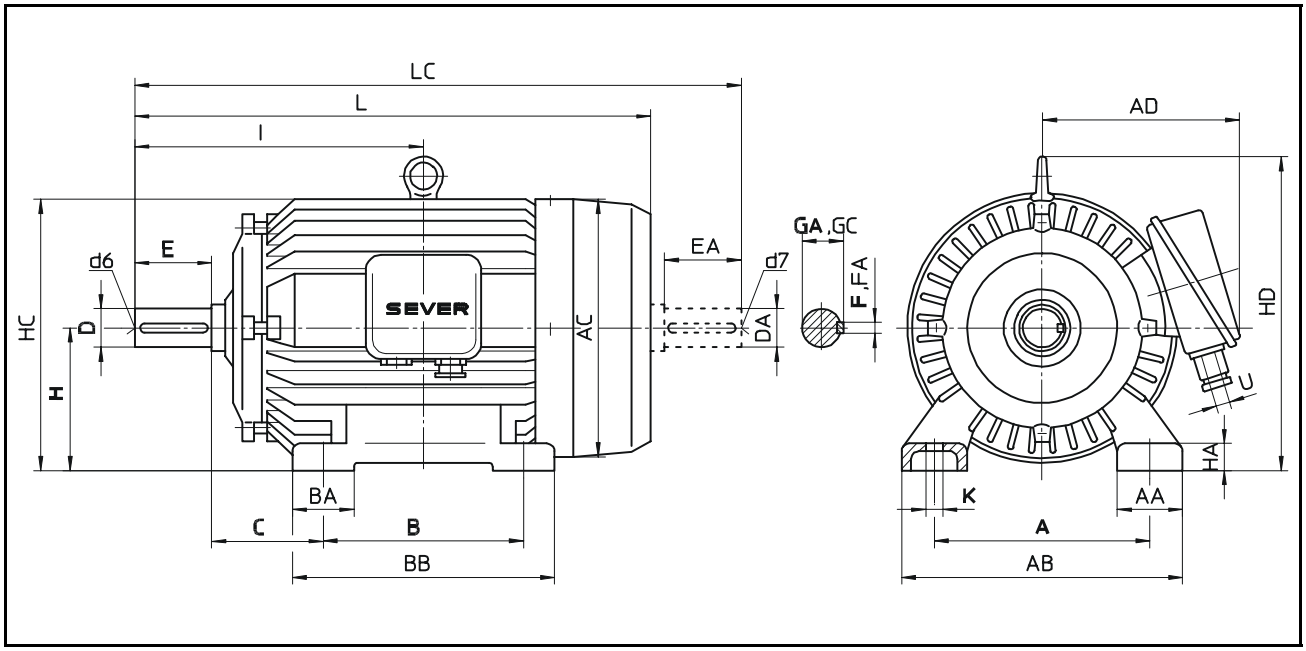

Type		Pole	A	AA	AB	AC	AD	B	BA	BB	C	D	DA	d6	d7	E	EA	F	FA	GA	GC	H	HA	HC	HD	I	K	L	LC	Cable gland
1.SZK 160	**M**	2,4,6,8	**254**	60	314	285	246	**210**	65	260	**108**	**42**	42	M16	M16	**110**	110	**12**	12	**45**	45	**160**	23	300,5	345	323	**15**	589	709	Pg 29x29
	L	2,4,6,8						**254**		304																345		633	753	
1.SZK 180	**M**	2,4	**279**	70	349	323	260	**241**	75	296	**121**	**48**	48	M16	M16	**110**	110	**14**	14	**51,5**	51,5	**180**	28	343	387	351,5	**15**	652	772	Pg 29x29
	L	4,6,8						**279**		334																370,5		690	810	
1.SZK 200 Lk,L		2,4,6,8	**318**	80	398	369	289	**305**	95	375	**133**	**55**	55	M20	M20	**110**	110	**16**	16	**59**	59	**200**	30	387,5	440	395,5	**19**	756	876	Pg 36x37
1.SZK 225	**S**	4,8	**356**	90	446	418	337	**286**	110	355	**149**	**60**	60	M20	M20	**140**	140	**18**	18	**64**	64	**225**	35	438	500	432	**19**	805	960	Pg 36x37
	M	2						**311**		380		**55**	55			**110**	110	**16**	16	**59**	59					414,5		800	925	
		4,6,8										**60**	60			**140**	140	**18**	18	**64**	64					444,5		830	985	
1.SZK 250	**S**	2	**406**	100	508	474	360	**349**	95	430	**168**	**60**	60	M20	M20	**140**	140	**18**	18	**64**	64	**250**	40	487,5	549	482,5	**24**	906	1061	Pg 36x37
	M	4,6,8										**65**	65							**69**	69									
1.SZK 280	**S**	2	**457**	110	567	510	379	**368**	112	450	**190**	**65**	65	M20	M20	**140**	140	**18**	18	**69**	69	**280**	45	535	607	514	**24**	973	1128	Pg 36x37
		4,6,8										**75**	75					**20**	20	**79,5**	79,5									
	M	2						**419**		500		**65**	65					**18**	18	**69**	69					539		1024	1179	
		4,6,8										**75**	75					**20**	20	**79,5**	79,5									
1.SZK 315	**S**	6,8	**508**	125	633	562	427	**406**	120	500	**216**	**80**	80	M20	M20	**170**	170	**22**	22	**85**	85	**315**	50	598,5	669	589	**28**	1102	1277	Pg 42x42
	M	6,8						**457**		550																614,5		1153	1328	

Mounting dimensions given in bold figures are obligatory in the sense of IEC recommendations.

Type: **1.SZK**
Protection: **EExe**
Temperature class: **T1 - T4**

IM B5, IM V1 - IM 3001, IM 3011

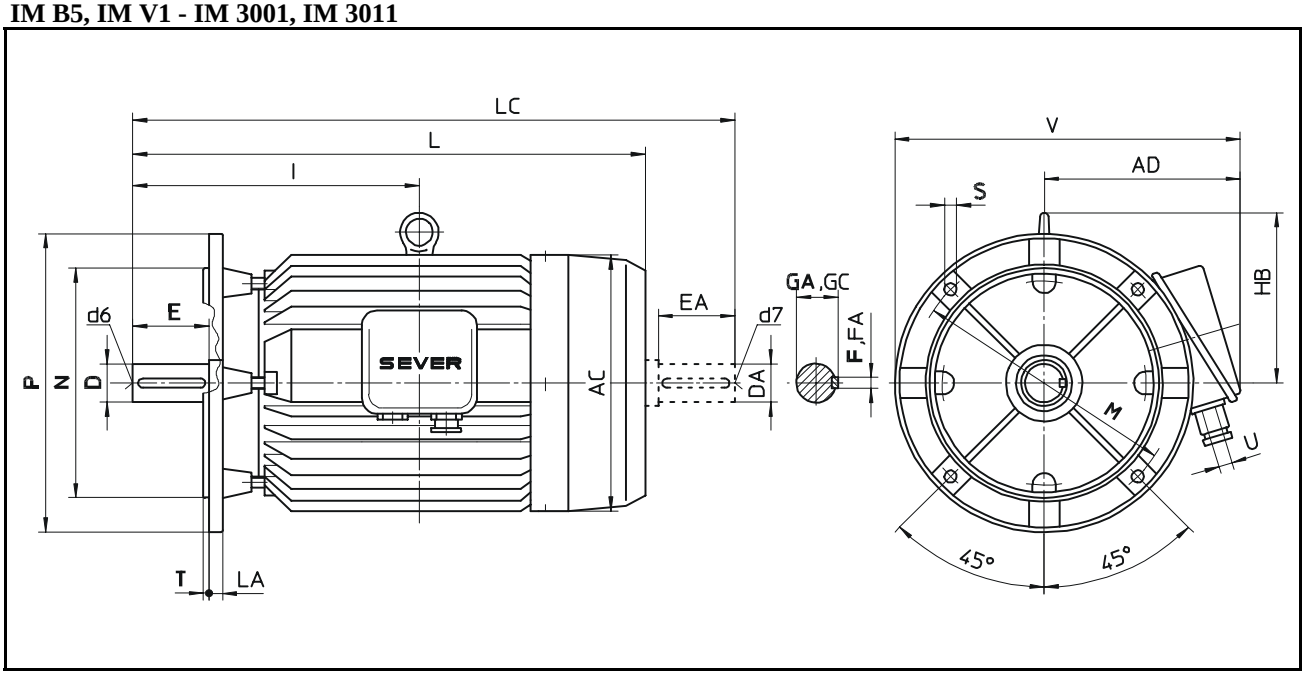

Type		Pole	Flange	AC	AD	D	DA	d6	d7	E	EA	F	FA	GA	GC	HB	I	L	LA	LC	M	N	P	S	Num. of holes	T	V	Cable gland
1.SZK 160	Mk	2,4,6,8	FF 300	285	246	**42**	42	M16	M16	**110**	110	**12**	12	45	45	185	323	589	20	709	**300**	**250**	**350**	**19**	4	**4**	421	Pg 29x29
	M	2,4,6,8																										
	L	2,4,6,8															345	633		753								
1.SZK 180	M	2,4	FF 300	325	260	**48**	48	M16	M16	**110**	110	**14**	14	51,5	51,5	207	351,5	652	20	772	**300**	**250**	**350**	**19**	4	**5**	435	Pg 29x29
	L	2,4,6															370,5	690		810								
1.SZK 200 Lk,L		2,4,6,8	FF 350	369	299	**55**	55	M20	M20	**110**	110	**16**	16	59	59	240	395,5	756	20	876	**350**	**300**	**400**	**19**	4	**5**	499	Pg 36x37
1.SZK225	S	4,6,8	FF 400	418	337	**60**	60	M20	M20	**140**	140	**18**	18	64	64	275	432	805	20	960	**400**	**350**	**450**	**18**	8	**5**	537	Pg 36x37
	M	2				**55**	55			**110**	110	**16**	16	59	59		414,5	800		925								
		4,6,8				**60**	60			**140**	140	**18**	18	64	64		444,5	830		985								
1.SZK 250	M	2	FF 500	471	360	**60**	60	M20	M20	**140**	140	**18**	18	64	64	299	482,5	906	22	1061	**500**	**450**	**550**	**19**	8	**5**	635	Pg 36x37
		4,6,8				**65**	65							69	69													
1.SZK 280	S	2	FF 500	510	379	**65**	65	M20	M20	**140**	140	**18**	18	69	69	327	514	973	22	1128	**500**	**450**	**550**	**19**	8	**5**	654	Pg 36x37
		4,6,8				**75**	75					**20**	20	79,5	79,5													
	M	2				**65**	65					**18**	18	69	69		539,5	1024		1179								
		4,6,8				**75**	75					**20**	20	79,5	79,5													
1.SZK 315	S	6,8	FF 600	562	427	**80**	80	M20	M20	**170**	170	**22**	22	85	85	344,5	589	1102	25	1277	**600**	**550**	**660**	**24**	8	**6**	757	Pg 42x42
	M	6,8															614,5	1153		1328								

Mounting dimensions given in bold figures are obligatory in the sense of IEC recommendations.

Type: .**SZK**
Protection: **EExe**
Temperature class: **T1 - T4**

IM B3 - IM 1001

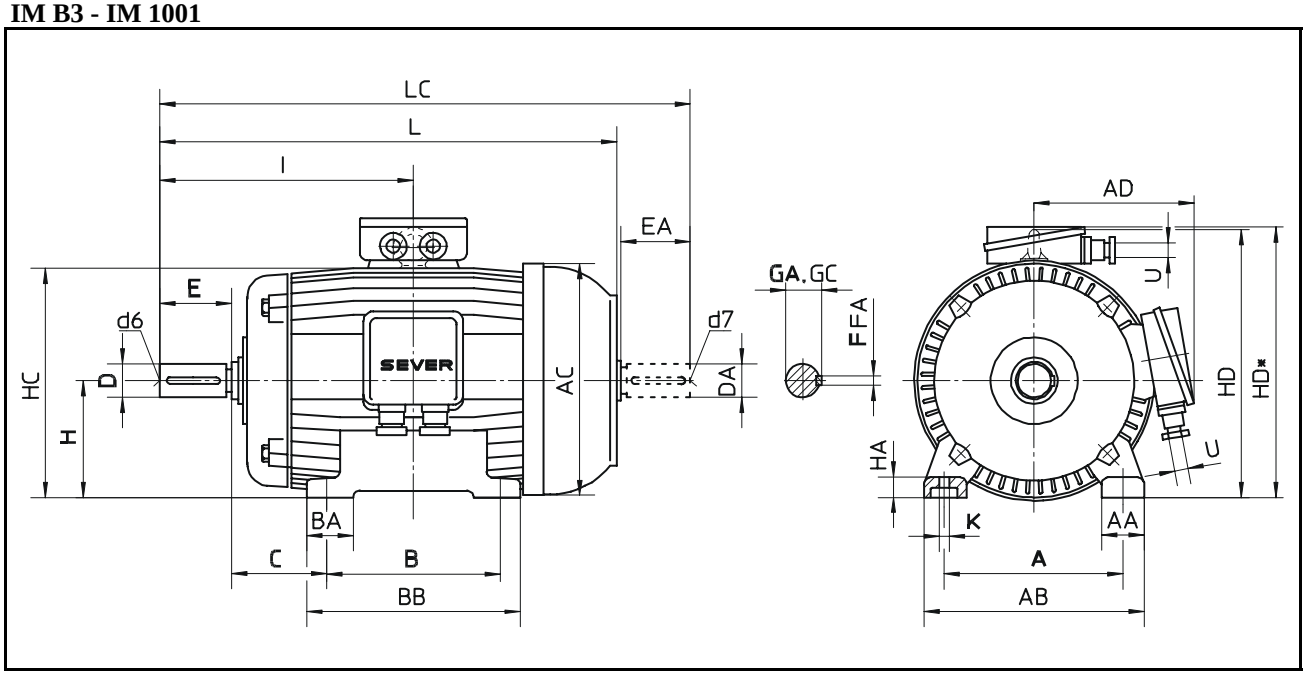

Type		Pole	A	AA	AB	AC	AD	B	BA	BB	C	D	DA	d6	d7	E	EA	F	FA	GA	GC	H	HA	HC	HD	HD*	I	K	L	LC	Cable gland
1.SZK 71		2,4,6,8	**112**	35	142	139	-	**90**	33	114	**45**	**14**	11	M5	M5	**30**	23	**5**	4	**16**	12,5	**71**	10	139	-	191	120	**7**	241	267	Pg 13,5x13
1.SZK 80		2,4,6,8	**125**	41	155	157	-	**100**	40	130	**50**	**19**	14	M6	M6	**40**	30	**6**	5	**21,5**	16	**80**	11	156	-	210	140	**10**	271	304	Pg 13,5x13
SZK 90	**S**	2,4,6,8	**140**	40	180	178	-	**100**	40	130	**56**	**24**	24	M8	M8	**50**	50	**8**	8	**27**	27	**90**	15	178	-	250	156	**10**	300	356	Pg 13,5x13
	L							**125**		155																	168,5		325	381	
2.SZK 100	**L**	2,4,6,8	**160**	44	204	198	-	**140**	48	175	**63**	**28**	28	M10	M10	**60**	60	**8**	8	**31**	31	**100**	16	198	-	274	193	**12**	370	438	Pg 13,5x13
	Ld	4,8																													
2.SZK 112	**M**	2,4,6,8	**190**	46	236	222	-	**140**	48	175	**70**	**28**	28	M10	M10	**60**	60	**8**	8	**31**	31	**112**	20	222	-	311	200	**12**	377	445	Pg 21x20
SZK132	**Sk**	2	**216**	55	271	260	214	**140**	52	180	**89**	**38**	38	M12	M12	**80**	80	**10**	10	**41**	41	**132**	22	261	307	-	239	**12**	441	529	Pg 21x20
	S	2,4,6,8																													
	M k	6						**178**		218																	258		479	567	
	M	2,4,6,8																													
SZK 315	**S**	2	**508**	125	633	598	447	**406**	150	500	**216**	**65**	65	M20	M20	**140**	140	**18**	18	**69**	69	**315**	50	615	705	-	559	**28**	1072	1232	Pg 42x42
		4										**80**	80			**170**	170	**22**	22	**85**	85					-	589		1102	1292	
	M	2				598	447	**457**	150	550		**65**	65			**140**	140	**18**	18	**69**	69			615	705	-	584,5		1123	1283	
		4										**80**	80			**170**	170	**22**	22	**85**	85					-	614,5		1153	1343	

Note: for frame size from 71 up to 112 terminal box is on the top,
for frame size from 132 up to 315 terminal box is on the right-hand side.

Mounting dimensions given in bold figures are obligatory in the sense of IEC recommendations.

Type: **.SZK**
Protection: **EExe**
Temperature class: **T1 - T4**

IM B5, IM V1 - IM 3001, IM 3011

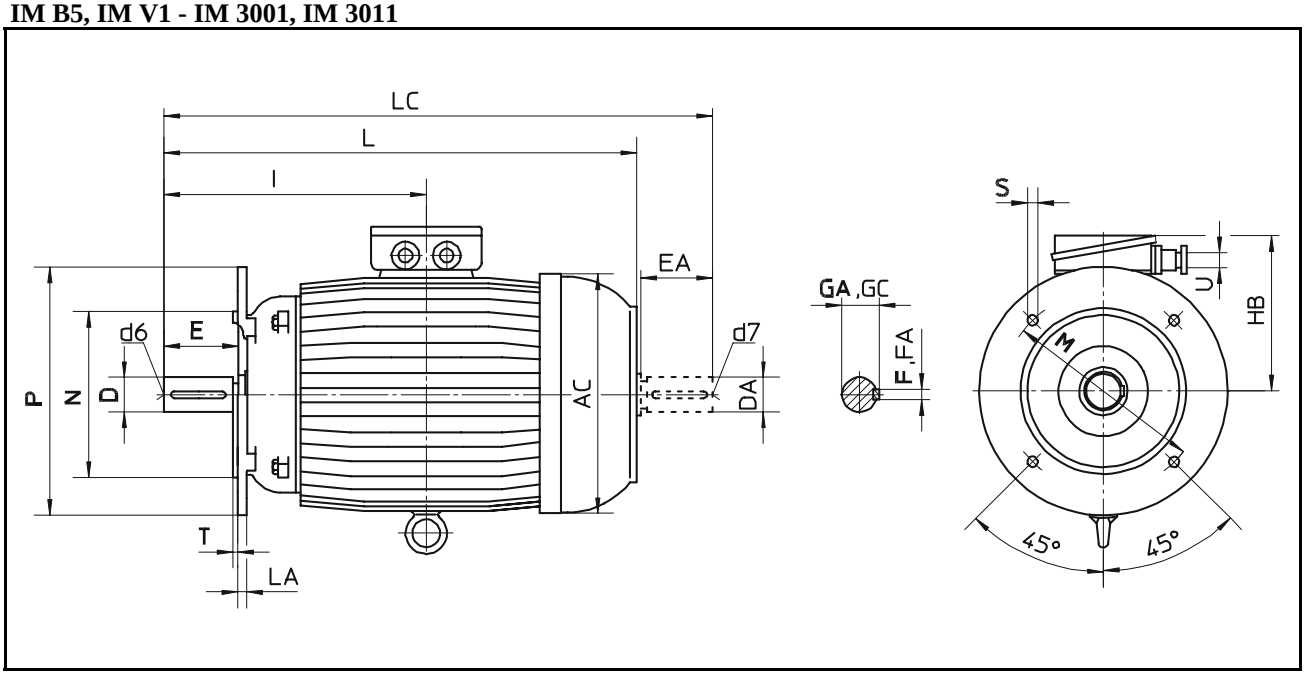

Type		Pole	Flange	AC	AD	D	DA	d6	d7	E	EA	F	FA	GA	GC	HB	I	L	LA	LC	M	N	P	S	Num. of holes	T	V	Cable gland
1.SZK 71		2,4,6,8	FF130	139	120	**14**	11	M5	M5	**30**	23	**5**	4	16	12,5	120	120	241	10	267	**130**	**110**	**160**	**10**	4	**3,5**	200	Pg 13,5x13
1.SZK 80		2,4,6,8	FF165	157	130	**19**	14	M6	M6	**40**	30	**6**	5	21,5	16	130	140	271	12	304	**165**	**130**	**200**	**12**	4	**3,5**	230	Pg 13,5x13
SZK 90	**S**	2,4,6,8	FF165	178	160	**24**	24	M8	M8	**50**	50	**8**	8	27	27	160	156	300	12	356	**165**	**130**	**200**	**12**	4	**3,5**	260	Pg 13,5x13
	L	2,4,6,8															168,5	325		381								
2.SZK 100	**L**	2,4,6,8	FF215	198	174	**28**	28	M10	M10	**60**	60	**8**	8	31	31	174	193	370	16	438	**215**	**180**	**250**	**15**	4	**4**	299	Pg 13,5x13
	Ld	2,4,6																										
2.SZK 112	**M**	2,4,6,8	FF215	222	199	**28**	28	M10	M10	**60**	60	**8**	8	31	31	199	200	377	16	445	**215**	**180**	**250**	**15**	4	**4**	324	Pg 21x20
SZK 132	**Sk**	2	FF265	260	214	**38**	38	M12	M12	**80**	80	**10**	10	41	41	175	239	441	20	529	**265**	**230**	**300**	**15**	4	**4**	364	Pg 21x20
	S	4,6,8																										
	Mk	2															258	479		567								
	M	4,6,8																										
SZK 315	**S**	2	FF600	598	447	**65**	65	M20	M20	**140**	140	**18**	18	69	69	390	559	1072	25	1232	**600**	**550**	**660**	**24**	8	**6**	747	Pg 42x42
		4				**80**	80			**170**	170	**22**	22	85	85		589	1102		1292								
	M	2		598	447	**65**	65			**140**	140	**18**	18	69	69	390	584,5	1123		1283	**600**	**550**	**660**	**24**	8	**6**	747	
		4				**80**	80			**170**	170	**22**	22	85	85		614,5	1153		1343								

Mounting dimensions given in bold figures are obligatory in the sense of IEC recommendations.

Type: .**SZK**
Protection: **EExe**
Temperature class: **T1 - T4**

IM B14 - IM 3601

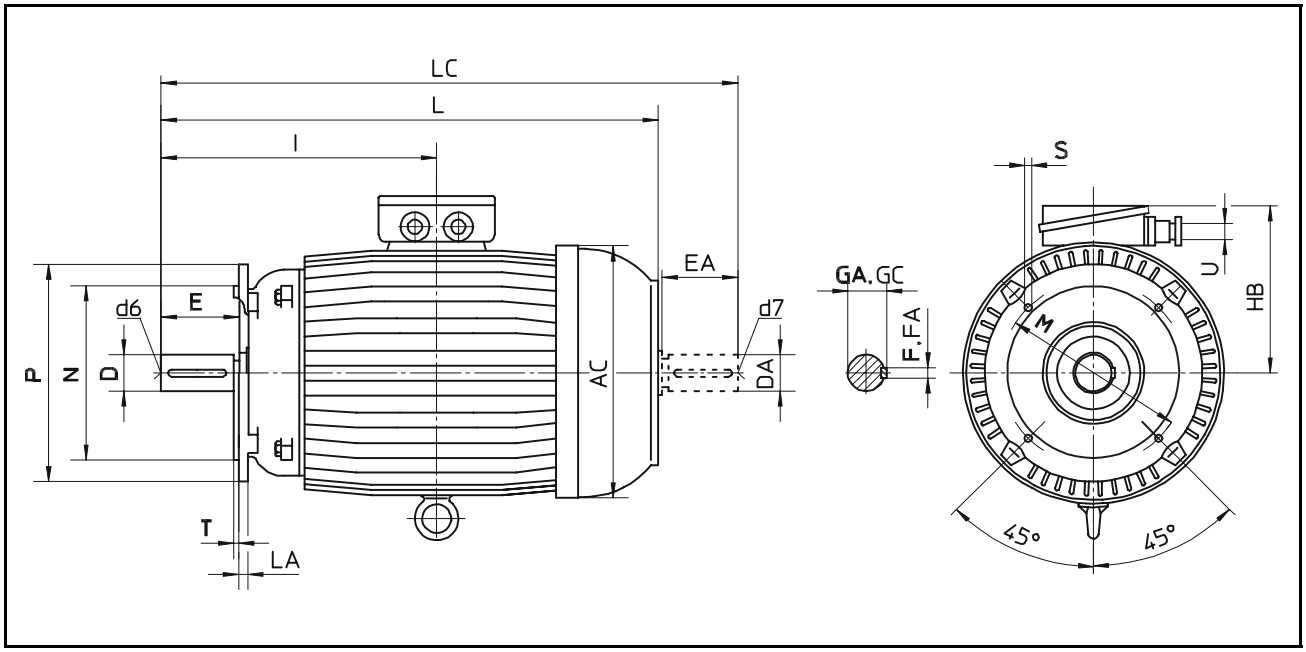

Type	Pole	Flange	AC	AD	D	DA	d6	d7	E	EA	F	FA	GA	GC	HB	I	L	LA	LC	M	N	P	S	T	Cable gland
1.SZK 71	2,4,6,8	F 85	139	120	**14**	11	M5	M5	**30**	23	**5**	4	16	12,5	120	120	241	8	267	**85**	**70**	**105**	**M6**	**2,5**	Pg 13,5x13
	2,4,6,8	F 115																10		**115**	**95**	**140**	**M8**	**3**	
1.SZK 80	2,4,6,8	F 100	157	130	**19**	14	M6	M6	**40**	30	**6**	5	21,5	16	130	140	271	8	304	**100**	**80**	**120**	**M6**	**3**	Pg 13,5x13
		F 130																10		**130**	**110**	**160**	**M8**	**3,5**	
SZK 90 S	2,4,6,8	F 115	178	169	**24**	24	M8	M8	**50**	50	**8**	8	27	27	160	156	300	10	356	**115**	**95**	**140**		**3**	Pg 13,5x13
	2,4,6,8	F 130																		**130**	**110**	**160**	**M8**	**3,5**	
SZK 90 L	2,4,6,8	F 115														168,5	325		381	**115**	**95**	**140**		**3**	Pg 13,5x13
	2,4,6,8	F 130																		**130**	**110**	**160**		**3,5**	
2.SZK 100 L	2,4,6,8	F 130	198	174	**28**	28	M10	M10	**60**	60	**8**	8	31	31	174	193	370	10	438	**130**	**110**	**160**	**M8**	**3,5**	Pg 13,5x13
	2,4,6	F 165																12		**165**	**130**	**200**	**M10**		
2.SZK 100 Ld	2,4,6,8	F 130																10		**130**	**110**	**160**	**M8**		
	2,4,6	F 165																12		**165**	**130**	**200**	**M10**		
2.SZK 112	2,4,6,8	F 130	222	199	**28**	28	M10	M10	**60**	60	**8**	8	31	31	199	200	377	10	445	**130**	**110**	**160**	**M8**	**3,5**	Pg 21x20
		F 165																12		**165**	**130**	**200**	**M10**		

Mounting dimensions given in bold figures are obligatory in the sense of IEC recommendations.

2.6 PARTS

PARTS OF ELECTRIC MOTORS MOTOR TYPE: **SZK 132-160**

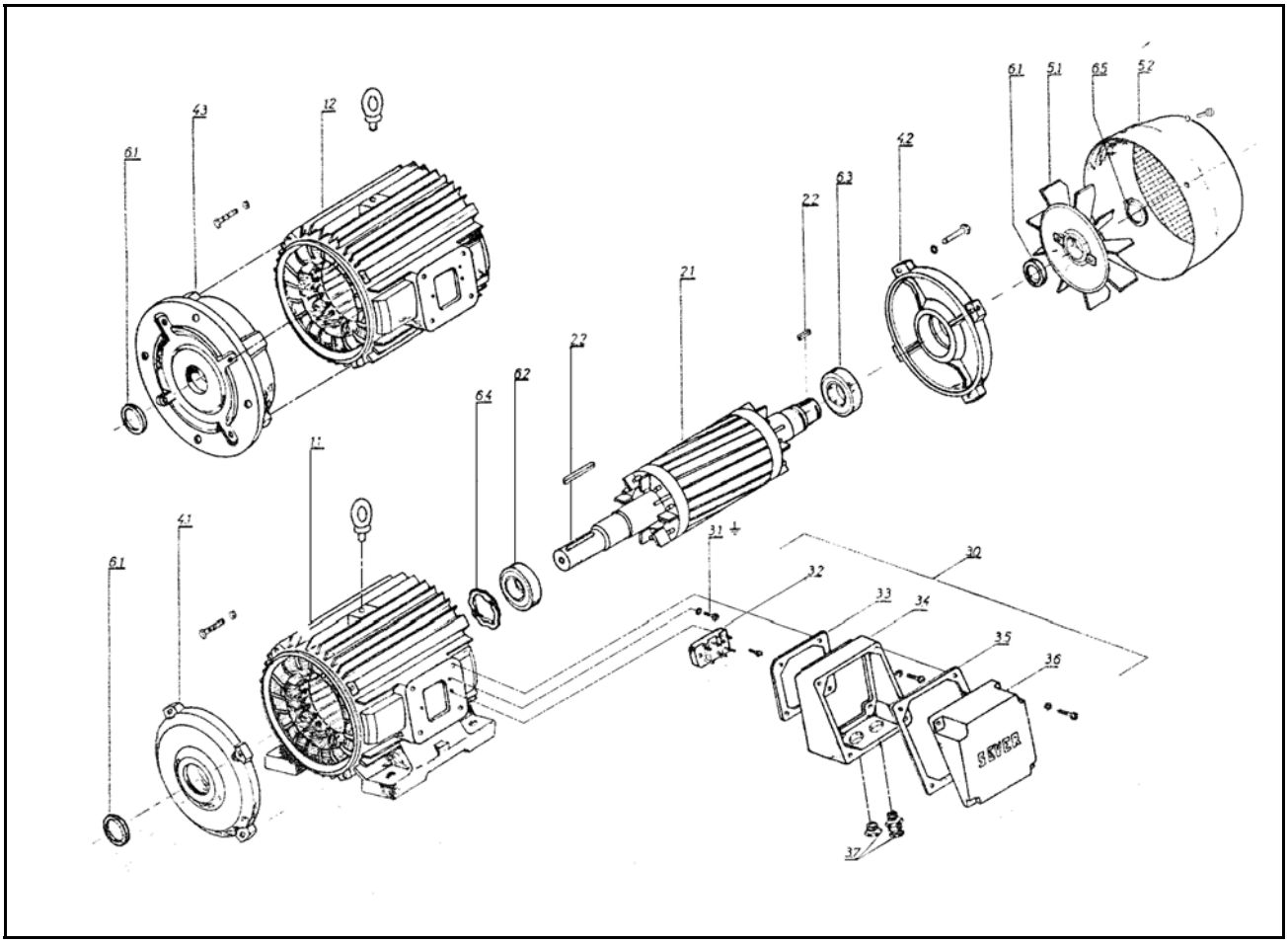

ITEM	DESCRIPTION
1.1	STATOR - SET IM B3
1.2	STATOR - SET IM B5
2.1	ROTOR - SET
2.2	ROTOR KEY
3.0	TERMINAL BOX - SET
3.1	EARTH TERMINAL
3.2	TERMINAL BOARD WITH ACCESSORIES (EExe)
3.3	GASKET FOR TERMINAL BOX FRAME
3.4	TERMINAL BOX FRAME
3.5	GASKET FOR TERMINAL BOX COVER
3.6	TERMINAL BOX COVER
3.7	CABLE GLAND
4.1	STATOR COVER - DRIVE SIDE (A)
4.2	STATOR COVER - FAN SIDE (B)
4.3	FLANGE
5.1	FAN
5.2	FAN COVER
6.1	RADIAL SHAFT SEAL
6.2	BEARING - DRIVE SIDE (A)
6.3	BEARING - FAN SIDE (B)
6.4	RESILIENT PRELOADING RING
6.5	CIRCLIP
6.6	BEARING COVER, EXTERNAL - DRIVE SIDE (A)
6.7	BEARING COVER, EXTERNAL - FAN SIDE (B)

PARTS OF ELECTRIC MOTORS

MOTOR TYPE: **1.SZK 180-225**
ZK 180-200

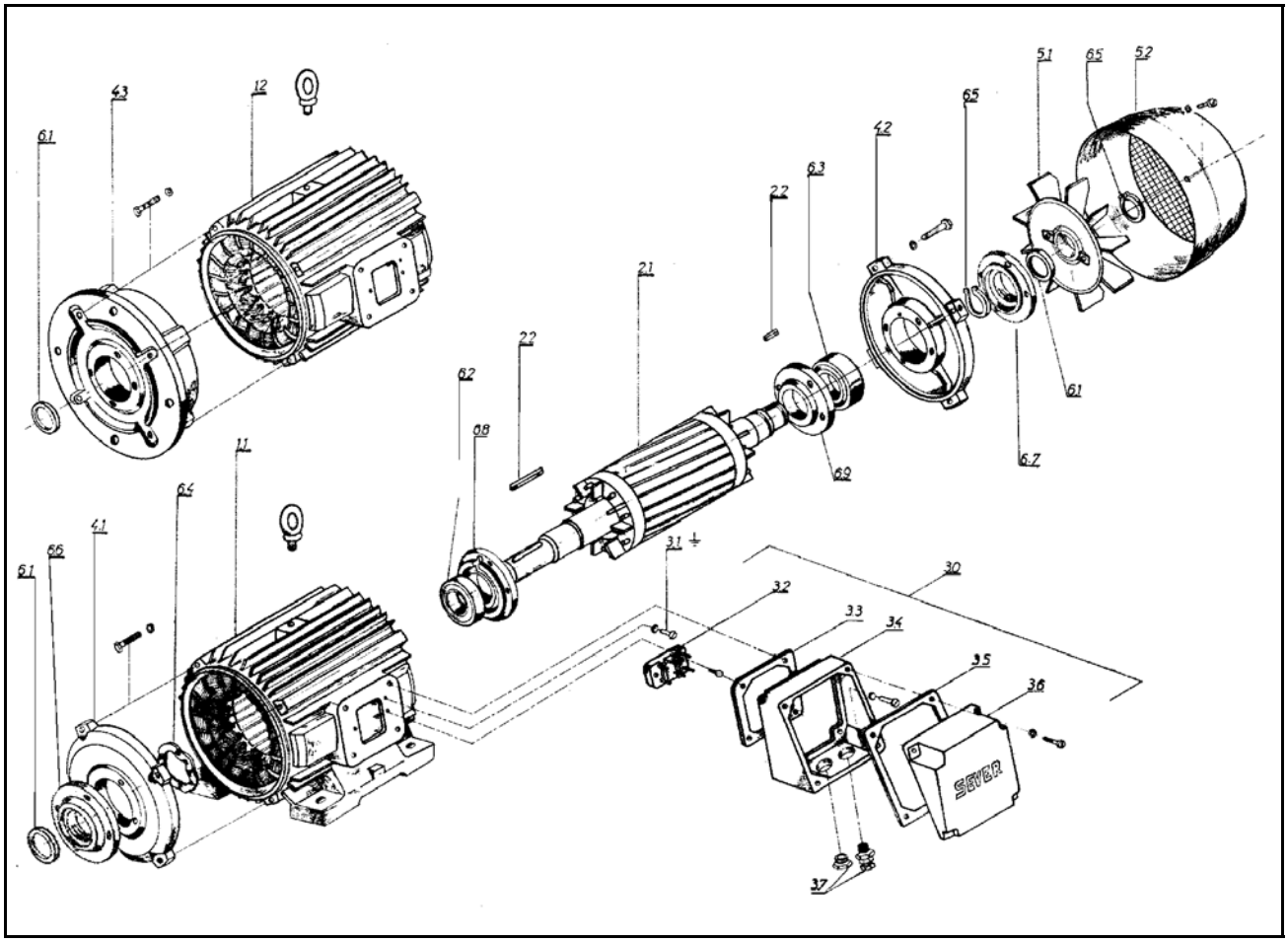

ITEM	DESCRIPTION
1.1	STATOR - SET IM B3
1.2	STATOR - SET IM B5
2.1	ROTOR - SET
2.2	ROTOR KEY
3.0	TERMINAL BOX - SET
3.1	EARTH TERMINAL
3.2	TERMINAL BOARD WITH ACCESSORIES (EExe)
3.3	GASKET FOR TERMINAL BOX FRAME
3.4	TERMINAL BOX FRAME
3.5	GASKET FOR TERMINAL BOX COVER
3.6	TERMINAL BOX COVER
3.7	CABLE GLAND
4.1	STATOR COVER - DRIVE SIDE (A)
4.2	STATOR COVER - FAN SIDE (B)
4.3	FLANGE
5.1	FAN
5.2	FAN COVER
6.1	RADIAL SHAFT SEAL
6.2	BEARING - DRIVE SIDE (A)
6.3	BEARING - FAN SIDE (B)
6.4	RESILIENT PRELOADING RING
6.5	CIRCLIP
6.6	BEARING COVER, EXTERNAL - DRIVE SIDE (A)
6.7	BEARING COVER, EXTERNAL - FAN SIDE (B)
6.8	BEARING COVER, INTERNAL - DRIVE SIDE (A)
6.9	BEARING COVER, INTERNAL - FAN SIDE (A)

PARTS OF ELECTRIC MOTORS MOTOR TYPE: **1.SZK 250-315**

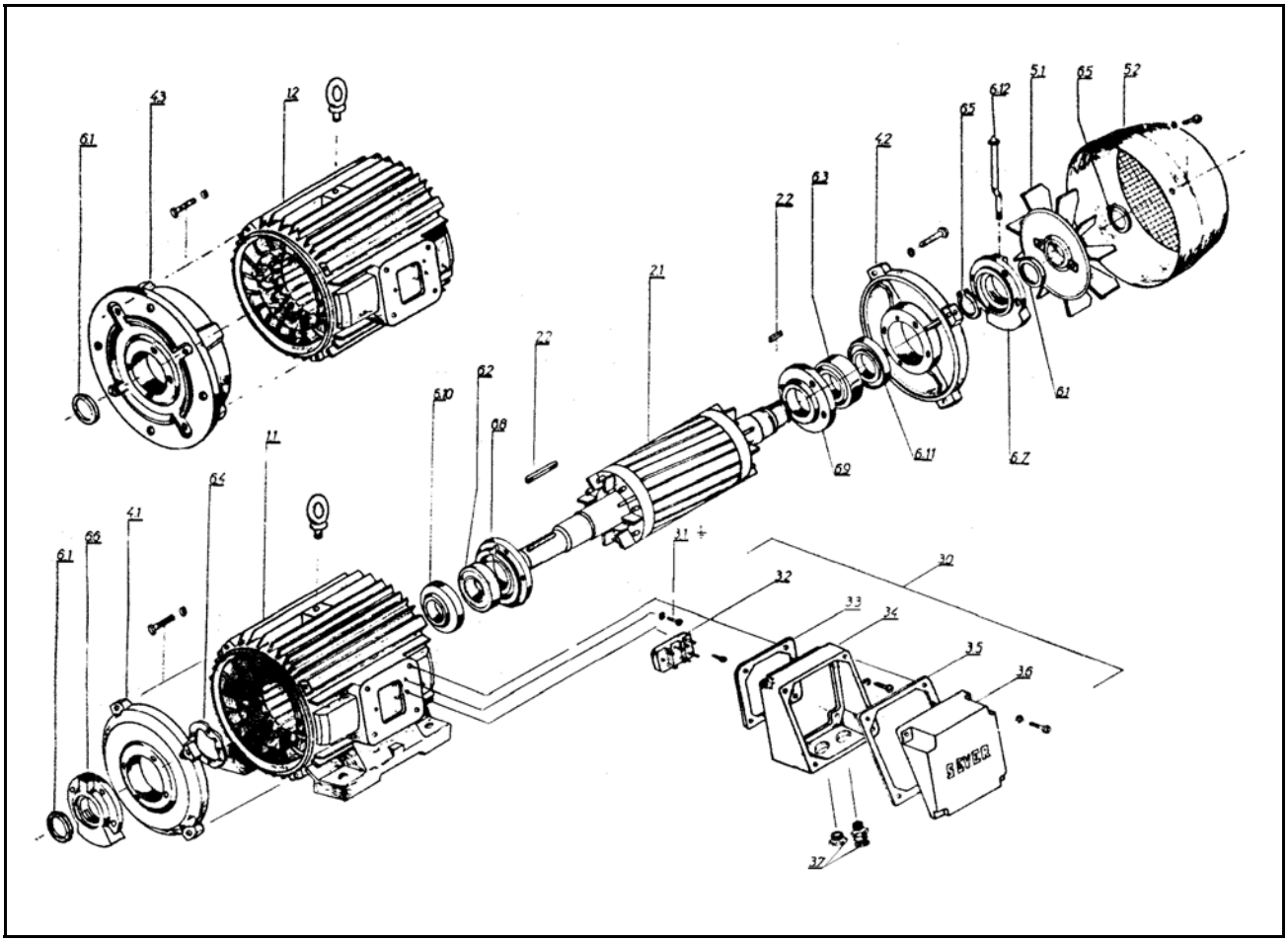

ITEM	DESCRIPTION
1.1	STATOR - SET IM B3
1.2	STATOR - SET IM B5
2.1	ROTOR - SET
2.2	ROTOR KEY
3.0	TERMINAL BOX - SET
3.1	EARTH TERMINAL
3.2	TERMINAL BOARD WITH ACCESSORIES (EExe)
3.3	GASKET FOR TERMINAL BOX FRAME
3.4	TERMINAL BOX FRAME
3.5	GASKET FOR TERMINAL BOX COVER
3.6	TERMINAL BOX COVER
3.7	CABLE GLAND
4.1	STATOR COVER - DRIVE SIDE (A)
4.2	STATOR COVER - FAN SIDE (B)
4.3	FLANGE
5.1	FAN
5.2	FAN COVER
6.1	RADIAL SHAFT SEAL
6.2	BEARING - DRIVE SIDE (A)
6.3	BEARING - FAN SIDE (B)
6.4	RESILIENT PRELOADING RING
6.5	CIRCLIP
6.6	BEARING COVER, EXTERNAL - DRIVE SIDE (A)
6.7	BEARING COVER, EXTERNAL - FAN SIDE (B)
6.8	BEARING COVER, INTERNAL - DRIVE SIDE (A)
6.9	BEARING COVER, INTERNAL - FAN SIDE (B)
6.10	GREASE QUANTITY REGULATOR - DRIVE SIDE (A)
6.11	GREASE QUANTITY REGULATOR - FAN SIDE (B)
6.12	RE-GREASING DEVICE

3. MOTORS IN PROTECTION OF FLAMEPROOF ENCLOSURE EExd

3.1 EXPLOSION-PROOF PROTECTION FLAMEPROOF ENCLOSURE EExd

The basic conception of the explosion proof protection flameproof enclosure EExd is that the parts of the electric device, which may cause ignition of explosive mixture, must be enclosed in an enclosure, which is the basic support of protection.

The enclosures are made of in a way so that:

- they can endure inner pressure of explosion without damage or not allowed deformation,
- they prevent penetrating ignition through the safety gaps in the external atmosphere.

I for application in mines,

II for application in surface industry.

Enclosures of group **II** are divided into subgroups **IIA, IIB** and **IIC** taking into consideration the classification of gases and vapours according to explosive groups. Classification of gases and vapours according to maximum experimental safety gap is given in the following table.

Equipment group	Group of gasses	Max. safety gap [mm] measured at length of 25 mm
II	A	gap ≥ 0.9
	B	0.5 < gap < 0.9
	C	gap < 0.5

Safety gap is provided by machining surface of the assembly parts with min. roughness of 3.2 μm. Machining traces can be seen, but can not be perceived by fingers. According to the type, safety gaps are classified as flat, cylindrical, screw and labyrinth ones. During testing, a flameproof enclosure must satisfy the following:

a) test control by increased pressure

b) test control by penetrating ignition.

Test control by increased pressure is performed with the aim to establish the referent pressure of explosion , and it is made by explosion of the test mixture for the appropriate group of gases. This treatment must not cause permanent deformation or damage of the device enclosure.

Test control by penetrating ignition is performed on the following way: the apparatus enclosure is filled with explosive mixture, then, this mixture is ignited inside the device. In a number of conducted tests it is registered if ignition of surrounding test mixture occurs through the gaps of the tested apparatus. Assembly screws for flameproof enclosures must be secure of loosening by using their special designs and also by using suitable flexible safety washers. In addition, current connections can be tested by indirect entry through the terminal box in a flameproof enclosure EExd or in increased safety EExe.

Electric leads from the terminal box, towards the interior of the flameproof enclosure can be led only through flameproof bushings molded in the insulation mass.

The limit temperature and the temperature rise of the enclosure in the external atmosphere must not exceed the values of the corresponding temperature class.

3.2 DESIGN

3.2.1 Forms, mechanical protection, constructional characteristics and materials of electric motor EExd

Explosion-proof protection flameproof enclosure EExd is realized by cylindrical and flat gaps, which meet the requirements of the standard IEC 60079-1/EN 50018/DIN EN50018/VDE 0171-5.

Motors, type St 1.ZK.. are three phase induction squirrel cage electric motors, single or multi-speed, for mounting arrangements IMB3, IMB5, IMV3, IMV5 and IMV6 (IEC 60034-7, DIN 42950 04,64).Cooling system is IC 411 as per IEC 60034-6 and degree of mechanical protection is IP 54 as per IEC 60034-5, DIN IEC 60034-5/VDE 0530-5.The motors are designed for the following application fields:

a) mines, i.e. pit mining **EExd** I
b) surface industry **EExd II** for:
-group of gases **A, B, C** and
- temperature classes **T1-T4**

Electric motors are made with the insulation class **F**.

Materials for electric motors EExd

<table>
<tr><th rowspan="3">Frame size</th><th colspan="8">Electric motor parts</th></tr>
<tr><th rowspan="2">Stator frame</th><th rowspan="2">Feet</th><th rowspan="2">Stator cover</th><th colspan="2">Fan cover</th><th colspan="2">Fan for both way rotation</th><th colspan="2">Terminal box</th></tr>
<tr><th>Exd I</th><th>Exd II</th><th>Exd I</th><th>Exd II</th><th>Exd I</th><th>Exd II</th></tr>
<tr><td>71
80
90
100
112
132
160
180
200</td><td rowspan="2">cast iron</td><td rowspan="2">cast iron</td><td rowspan="4">cast iron</td><td rowspan="4">steel</td><td rowspan="3">steel</td><td rowspan="4">cast iron</td><td rowspan="4">aluminium alloy</td><td rowspan="4">cast iron</td><td rowspan="4">aluminium alloy</td></tr>
<tr><td>225
250
280
315</td><td rowspan="2">steel</td><td rowspan="2">welded</td></tr>
<tr><td>steel</td></tr>
</table>

3.2.2 Terminal box and assembly drawings

Terminal box is designed in two versions:

a) Terminal box in increased safety EExe (fig.2) is made of aluminium alloy and it is with an interplate, where the outlet leads are molded in, and with a certified terminal board. Cable entries of a terminal box in explosion-proof protection EExe and EExd II are type Pg (DIN 46255).

b) Cast iron terminal box (fig.3) has two chambers, one of which is in protection EExd and the other one is in protection EExe. Chambers are connected by three flameproof bushings. A certified cable gland with trumpet is fitted to the terminal box and this design is used with electric motors both for mines and for surface industry. This terminal box has three connections (flameproof bushings) and it is used only for motors with direct starting. On a special request, for electric motors in EExd I (for mines), the terminal box and the cable gland with trumpet can be protected with an additional shield, which protects the terminal box and the cable gland against mechanical damages.

Table for fig. 2.

Frame size	a	b	c	d	e	h	Cable gland as per DIN 46255 *	Terminal board **
71 and **80**	90	36	-	14	66	62	Pg-13,5	KB1 Ex
90 and **100**	104	36	-	14	73	84	Pg-13,5	KB1 Ex
112 and **132**	128	42	-	21	92	94	Pg-21	KB2 Ex
160 and **180**	148	55	-	30	105	105	Pg-29	KB3 Ex
200 and **225**	170	70	-	38	120	110,5	Pg 36	KB4 Ex
250 and **280**	200	70	-	38	135	128	Pg 36	KB4 Ex
315	250	80	-	43	165	142	Pg 42	KB5 Ex

Table for fig. 3.

Frame size	a	b	c	d	e	h	Cable gland with trumpet as per EN 50014 and EN 50018 *	Type of flameproof bushing **
71 and **80**	160	115	98	15	172	105	Re-13,5	PI 16
90 and **100**	176	126	110	15	188	113		
112	200	138	126	19	208	115	Re-16	PI 25
132							Re-21	
160 and **180**	230	156	150	24	256	117	Re-29	PI 63
200 and **225**	276	176	181	34	313	135	Re 36	PI 100
250 and **280**	377	226	247	34	380	186	Re 36	PI 160
315	422	270	283	41	330	197	Re 42	PI 250

All dimensions in millimeters.

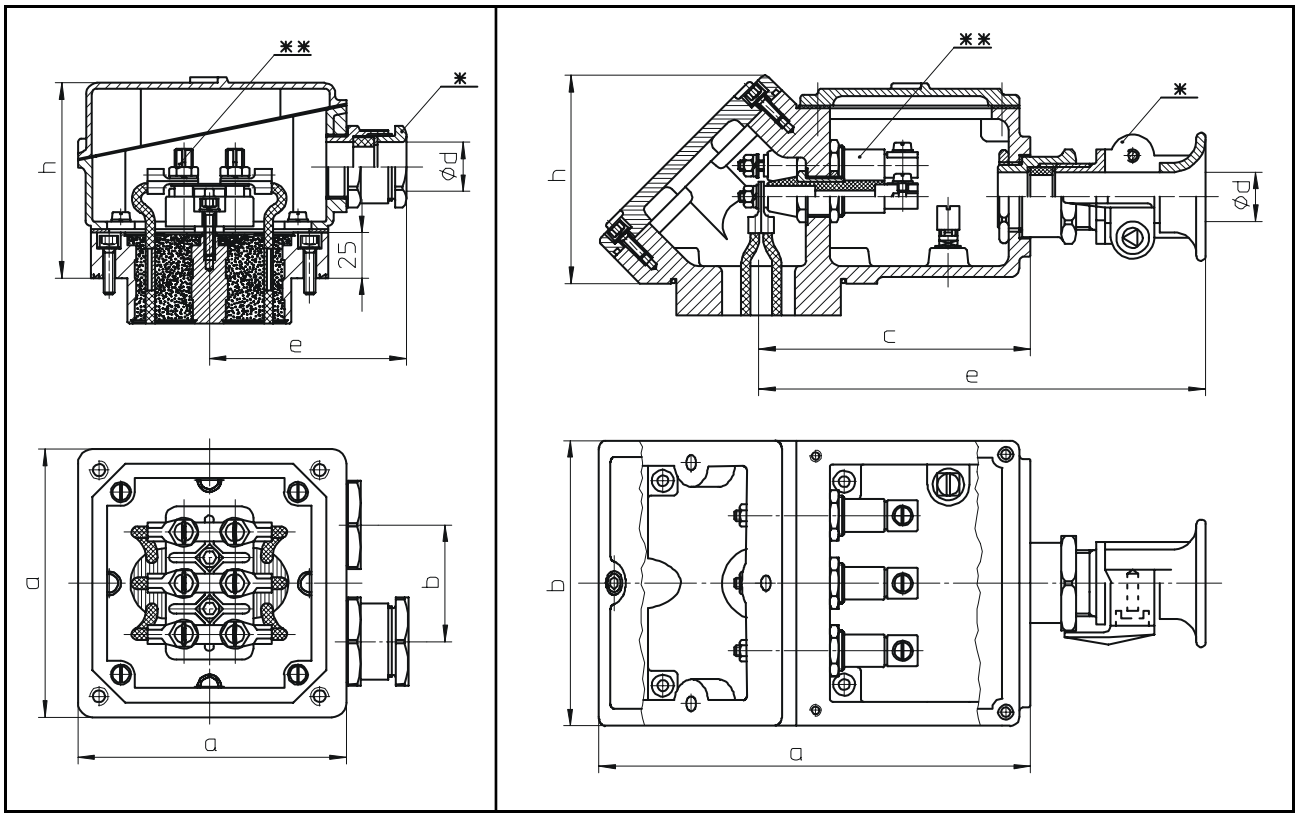

Fig. 2. Fig. 3.

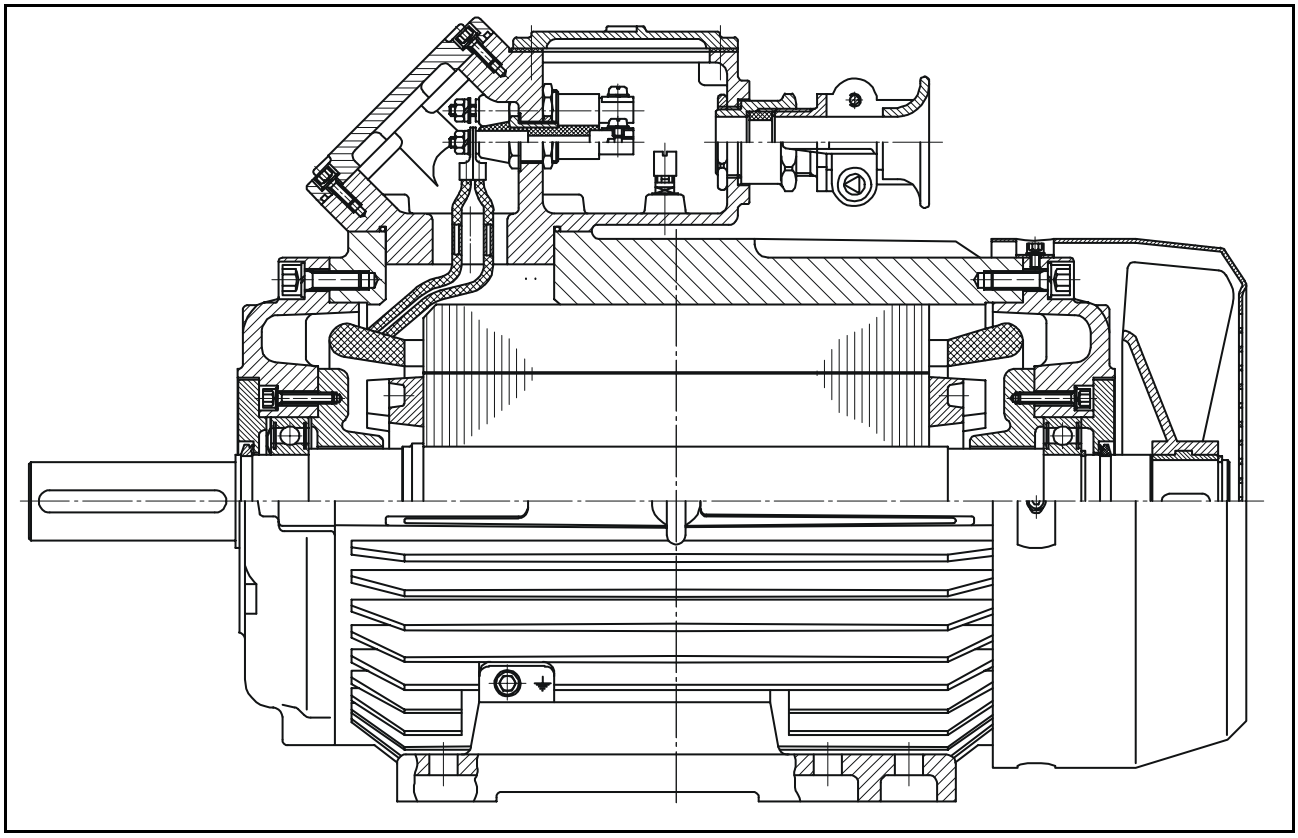

Assembly drawings - el.motor in explosion-proof protection, cast iron design with flameproof bushings, EExde I, EExde II B

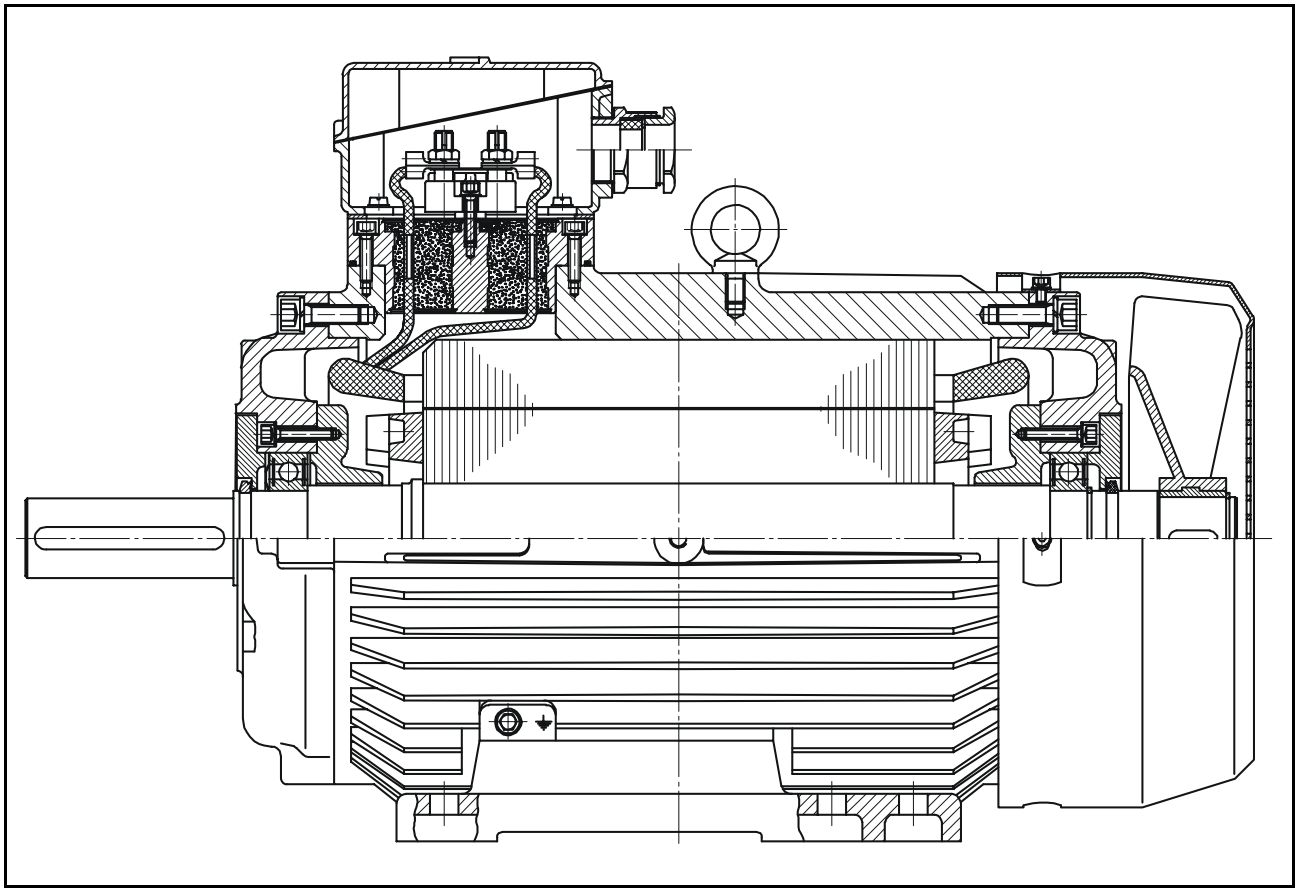

Assembly drawings - el.motor in explosion-proof protection, cast iron design with molded outlet leads, EExde II B

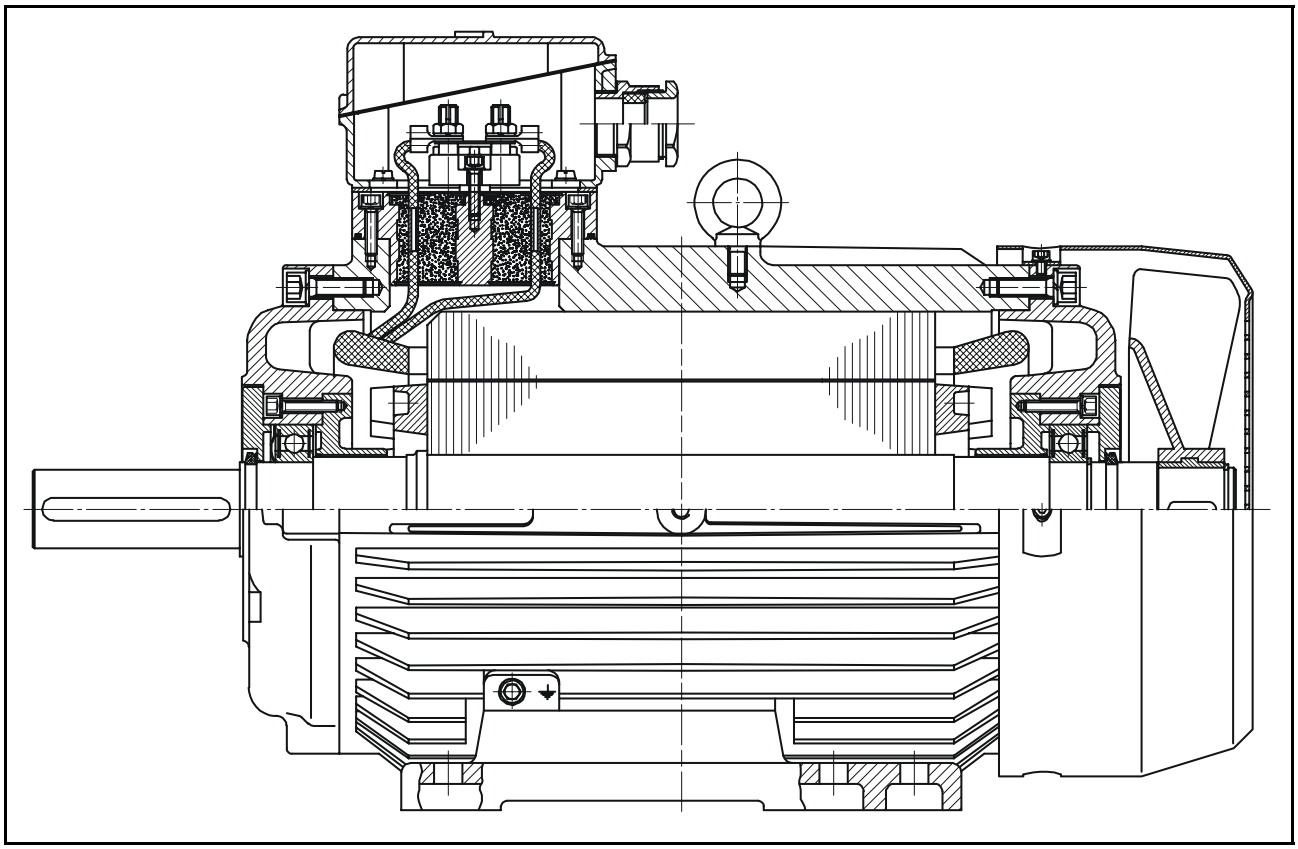

Assembly drawings - el.motor in explosion-proof protection, cast iron design with molded outlet leads, EExde II C

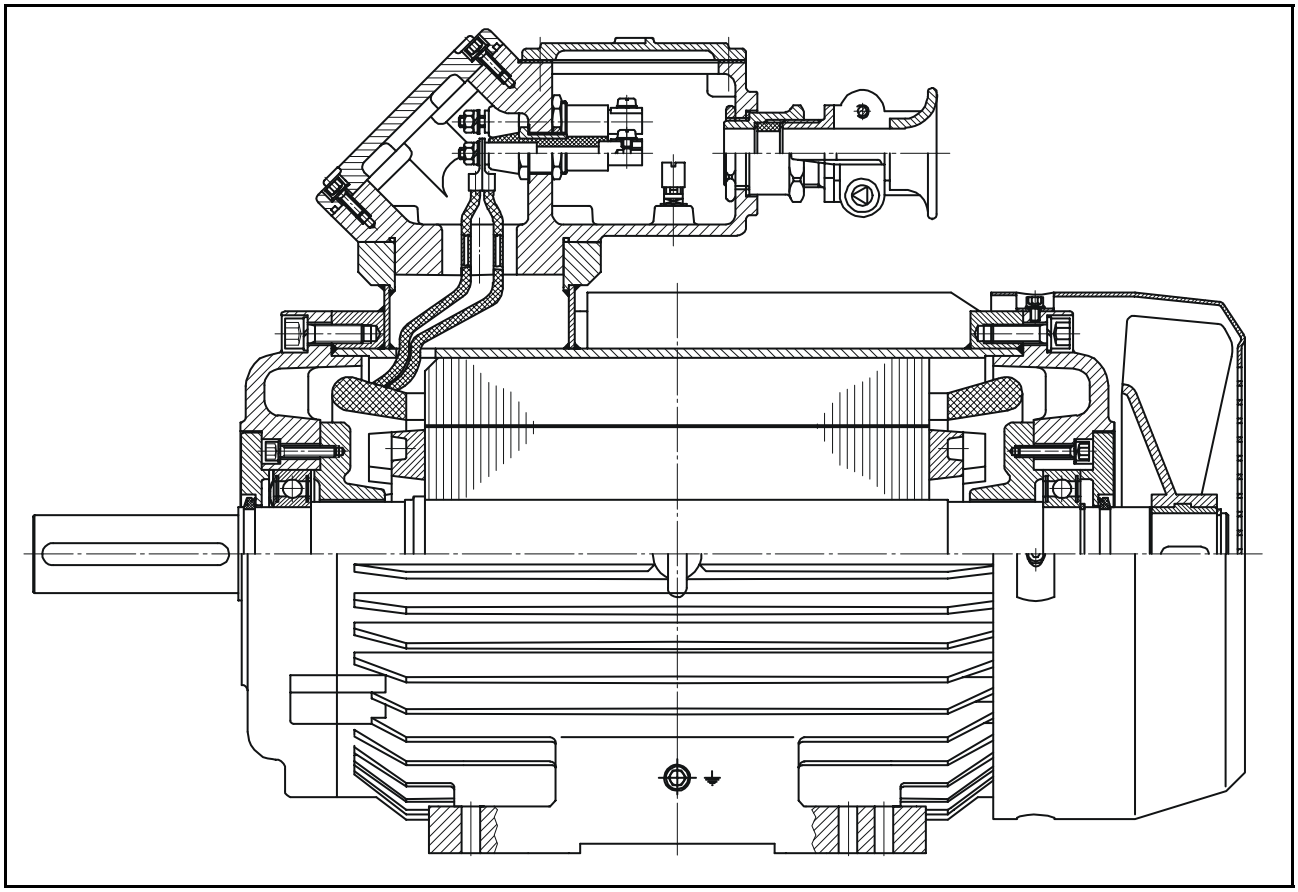

Assembly drawings - el.motor in explosion-proof protection, welded design with flameproof bushings, EExde I, EExde II B

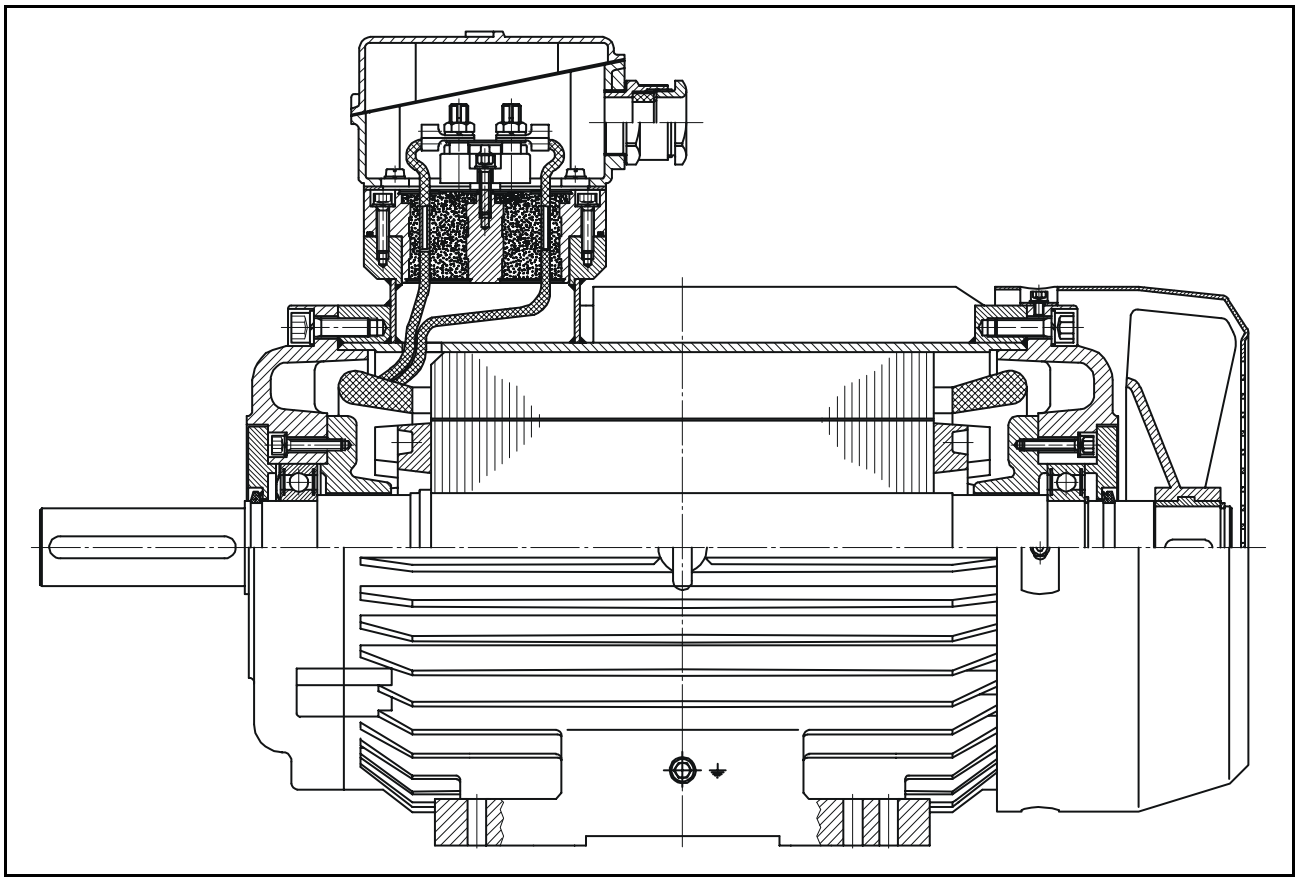

Assembly drawings - el.motor in explosion-proof protection, welded design with molded outlet leads, EExde II B

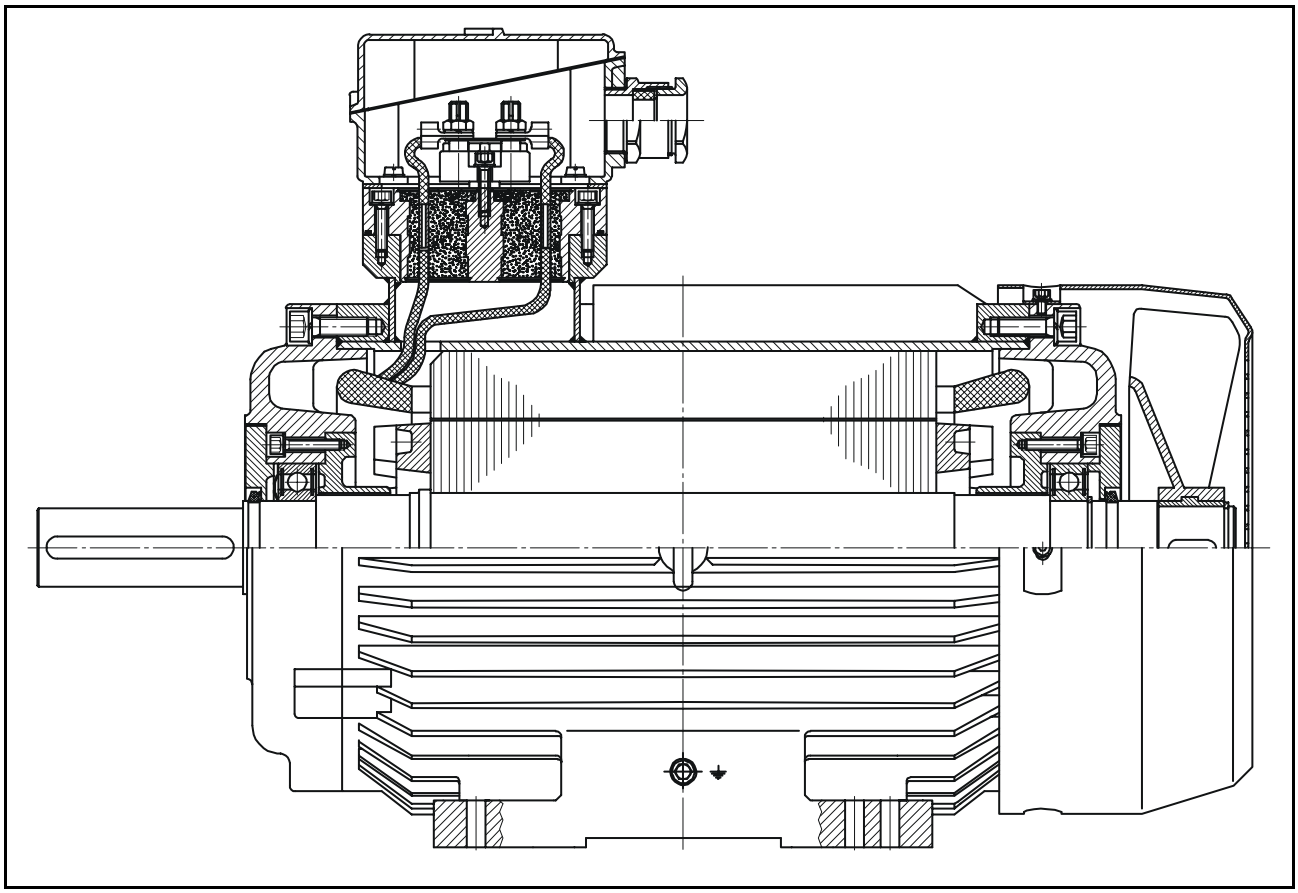

Assembly drawings - el.motor in explosion-proof protection, welded design with molded outlet leads, EExde II C

3.2.3 Bearing arrangement

Shaft of electric motor is arranged with roller bearings without possibility of re-lubrication. Motors of frame size 71 - 132 have non-fixed bearings on both sides, while the motors of frame size 160 - 315 have fixed fan side (BS) bearing and non-fixed drive side (AS) bearing. Types of bearings for normal duty conditions are given in the following table.

Frame size	Num. of poles	AS bearing	BS bearing
71	2,4,6,8	6203 2Z	6203 2Z
80	2,4,6,8	6204 2Z	6204 2Z
90	2,4,6,8	6205 2Z	6205 2Z
100	2,4,6,8	6206 2Z	6206 2Z
112	2,4,6,8	6206 2Z	6206 2Z
132	2,4,6,8	6208 2Z	6208 2Z
160	2,4,6,8	6210 2Z	6210 2Z
180	2,4,6,8	6310 2Z	6310 2Z
200	2,4,6,8	6312 2Z	6312 2Z
225	2,4,6,8	6314 2Z	6314 2Z
250	2,4,6,8	6315 2Z	6315 2Z
280	2,4,6,8	6316 2Z	6316 2Z
315	2,4,6,8	6317 2Z	6317 2Z

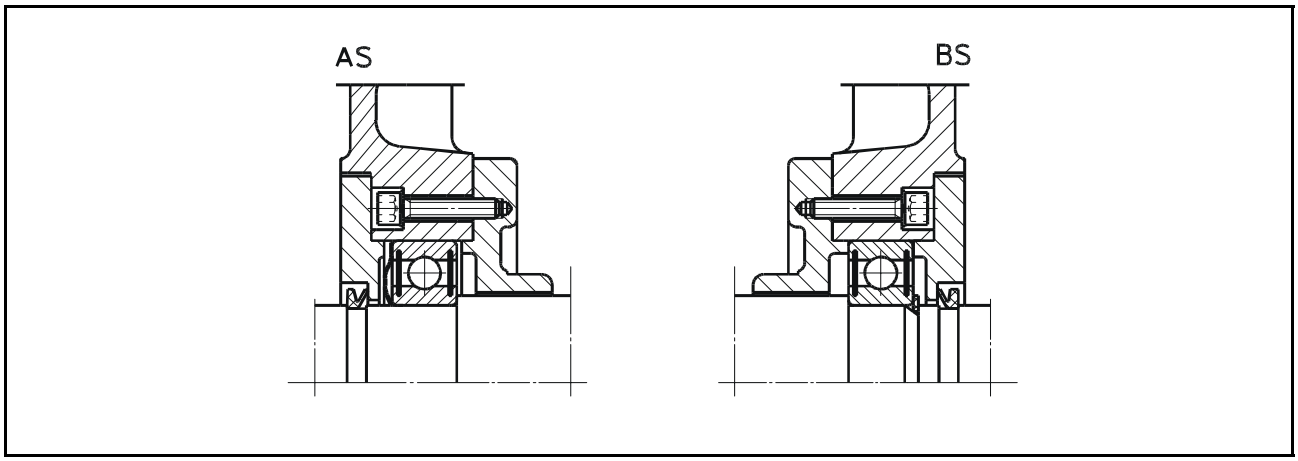

Bearing arrangement of electric motors in flameproof enclosure EExde I, EExde IIB

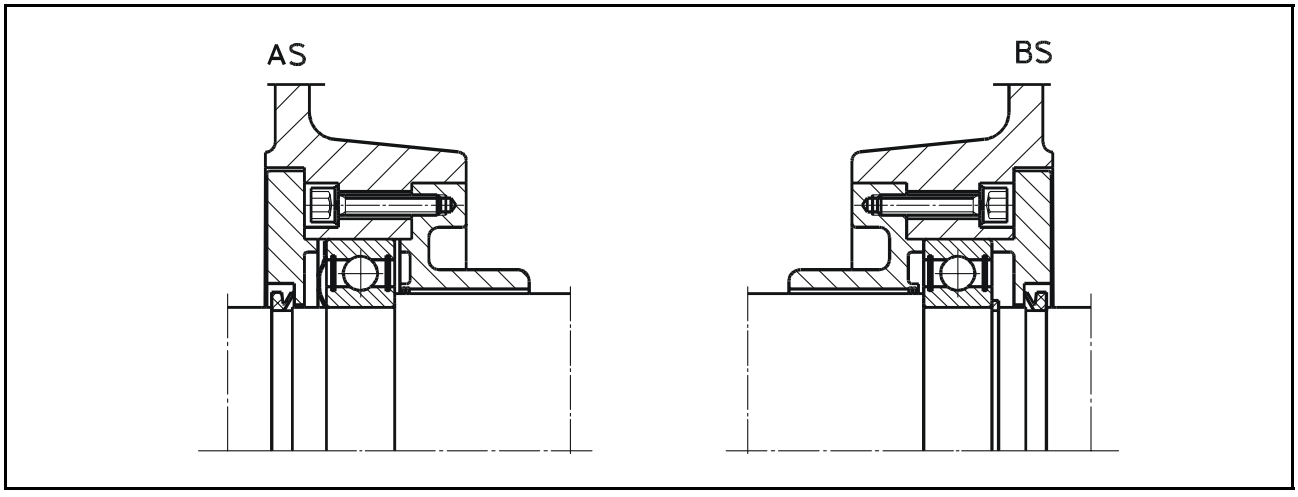

Bearing arrangement of electric motors in flameproof enclosure EExde IIC

3.3 TECHNICAL DATA FOR SINGLE-SPEED MOTORS SELECTION

3000 min^{-1}, 400 V, 50 Hz, Insulation class: F, Mechanical protection IP 55

Type		Output [kW]	n [min^{-1}]	η [%]	cos φ	I_N [A]	M_N [Nm]	$\frac{I_P}{I_N}$	$\frac{M_P}{M_N}$	$\frac{M_m}{M_N}$	KR	J [kgm^4]	Mass [kg]
St 1.ZK 71	**A-2**	0,37	2750	63	0,81	1,05	1,3	3,5	2,0	-	16	0,00023	16
	B-2	0,55	2760	69	0,81	1,43	1,9	4,2	2,2	-	16	0,00033	18
St 1.ZK 80	**A-2**	0,75	2770	72	0,80	1,87	2,6	4,8	2,3	-	16	0,00055	23
	B-2	1,1	2770	73	0,84	2,58	3,8	4,7	2,3	-	16	0,00066	24
St 1.ZK 90	**S-2**	1,5	2810	74	0,85	3,42	5,1	5,3	2,3	-	16	0,00123	28
	L-2	2,2	2830	80	0,85	4,66	7,4	6,3	2,9	-	16	0,00184	30
St 1.ZK 100	**L-2**	3	2830	80	0,86	6,27	10,0	6,5	2,4	2,6	16	0,003	38
St 1.ZK 112	**M-2**	4	2830	82	0,90	7,80	13,5	7,6	3,2	3,3	16	0,005	52
St 1.ZK 132	**Sk-2**	5,5	2840	82	0,90	10,74	18,5	7,5	3,6	3,8	16	0,01	81
	S-2	7,5	2860	84	0,90	14,25	25,0	8,0	3,7	4,0	16	0,013	87
St 1.ZK 160	**Mk-2**	11	2890	86	0,87	21	36	8,5	3,7	3,9	16	0,021	89
	M-2	15	2900	87	0,87	28	49	8,5	3,7	3,9	16	0,028	108
	L-2	18,5	2905	88	0,88	34	61	8,9	3,7	3,9	16	0,034	113
St 1.ZK 180	**M-2**	22	2920	89	0,87	41	72	8,0	3,5	3,4	16	0,057	138
St 1.ZK 200	**Lk-2**	30	2935	89,5	0,87	47	98	8,5	3,1	3,1	16	0,11	199
	L-2	37	2940	90	0,88	66	120	7,9	3,4	3,2	16	0,13	215
St 1.ZK 225	**M-2**	45	2960	92	0,88	80	145	7,5	2,7	4,9	16	0,23	290
St 1.ZK 250	**M-2**	55	2960	93	0,88	97	177	7,5	2,5	3,0	16	0,36	395
St 1.ZK 280	**S-2**	75	2960	93	0,90	130	242	7,5	2,1	4,8	16	0,67	510
	M-2	90	2965	93,5	0,89	158	290	7,5	2,4	3,0	16	0,81	600
St 1.ZK 315	**S-2**	110	2970	93,5	0,92	186	420	8,0	2,5	3,2	16	1,3	700
	M-2	132	2975	94	0,92	222	510	8,0	2,5	3,2	16	1,6	850

1500 min^{-1}, 400 V, 50 Hz, Insulation class: F, Mechanical protection IP 55

Type		Output [kW]	n [min^{-1}]	η [%]	cos φ	I_N [A]	M_N [Nm]	$\frac{I_P}{I_N}$	$\frac{M_P}{M_N}$	$\frac{M_m}{M_N}$	KR	J [kgm^4]	Mass [kg]
St 1.ZK 71	**A-4**	0,25	1345	63	0,76	0,75	1,77	3,2	1,7	1,9	13	0,00038	16
	B-4	0,37	1370	66	0,75	1,07	2,58	3,5	2,0	2,1	13	0,00055	18
St 1.ZK 80	**A-4**	0,55	1375	69	0,76	1,51	3,8	3,5	1,8	1,9	13	0,0009	23
	B-4	0,75	1375	71	0,75	2,02	5,2	3,7	2,0	2,1	13	0,0011	24
St 1.ZK 90	**S-4**	1,1	1410	74	0,78	2,76	7,5	4,5	2,0	2,2	16	0,0023	29
	L-4	1,5	1405	76	0,79	3,61	10	4,9	2,3	2,6	16	0,0032	30
St 1.ZK 100	**L-4**	2,2	1410	78	0,81	5,04	15	5,9	2,4	2,8	16	0,0054	41
	Ld-4	3	1410	76	0,80	7,13	20	6,2	2,7	2,9	16	0,0071	50
St 1.ZK 112	**M-4**	4	1420	81	0,82	8,65	27	6,5	2,9	3,2	16	0,013	64
St 1.ZK 132	**S-4**	5,5	1450	85	0,82	11,40	36	6,2	2,0	2,7	16	0,019	83
	M-4	7,5	1450	86	0,80	15,68	49	6,5	2,2	2,9	16	0,025	91
St 1.ZK 160	**M-4**	11	1440	88	0,82	22	73	6,5	3,0	3,0	16	0,055	89
	L-4	15	1440	88	0,82	30	100	6,8	3,0	3,0	16	0,073	118
St 1.ZK 180	**M-4**	18,5	1460	89	0,82	36	121	6,5	2,8	2,6	16	0,086	140
	L-4	22	1460	90	0,83	42	144	6,5	2,8	2,6	16	0,102	155
St 1.ZK 200	**L-4**	30	1470	90	0,83	58	195	7,5	2,9	2,8	16	0,27	230
St 1.ZK 225	**S-4**	37	1470	92	0,86	68	240	6,5	2,3	2,5	16	0,362	280
	M-4	45	1470	92	0,86	82	292	6,5	2,3	2,5	16	0,442	320
St 1.ZK 250	**M-4**	55	1480	92,5	0,87	100	355	6,8	2,3	2,7	16	0,64	385
St 1.ZK 280	**S-4**	75	1480	93	0,87	135	486	7,5	2,6	2,8	16	1,10	525
	M-4	90	1480	93,5	0,87	162	581	7,5	2,6	2,8	16	1,31	610
St 1.ZK 315	**S-4**	110	1485	94	0,90	190	710	7,5	2,4	3,0	16	2,12	750
	M-4	132	1480	94,3	0,90	226	850	7,5	2,4	3,0	16	2,54	900

I_n - Rated Current

I_p - Locked-rotor Current

M_n - Rated Torque

M_m - Breakdown Torque

M_p - Locked-rotor Torque

KR - Rotor class

1000 min^{-1}, 400 V, 50 Hz, Insulation class: F, Mechanical protection: IP 55

Type		Output [kW]	n [min^{-1}]	η [%]	cos φ	I_N [A]	M_N [Nm]	$\frac{I_P}{I_N}$	$\frac{M_P}{M_N}$	$\frac{M_m}{M_N}$	KR	J [kgm^4]	Mass [kg]
St 1.ZK 71	**A-6**	0,18	900	57	0,65	0,70	1,9	2,6	1,9	2,0	13	0,00055	18
	B-6	0,25	890	57	0,64	0,99	2,7	2,6	1,8	2,1	13	0,00071	20
St 1.ZK 80	**A-6**	0,37	915	66	0,69	1,17	3,9	3,6	2,0	2,2	13	0,0018	24
	B-6	0,55	915	68	0,66	1,77	5,7	3,7	2,4	2,5	13	0,0024	26
St 1.ZK 90	**S-6**	0,75	920	70	0,72	2,14	7,8	3,8	2,0	2,2	16	0,0037	29
	L-6	1,1	920	70	0,70	3,33	11,2	3,8	2,2	2,4	16	0,0054	31
St 1.ZK 100	**L-6**	1,5	910	71	0,75	4,09	15,7	4,2	2,2	2,4	13	0,0054	41
St 1.ZK 112	**M-6**	2,2	925	76	0,75	5,61	22,7	4,8	2,5	2,9	16	0,012	58
St 1.ZK 132	**S-6**	3	945	81	0,76	7,03	30,3	4,5	2,0	2,4	13	0,015	77
	Mk-6	4	950	82	0,77	9,12	40,2	4,5	1,9	2,0	13	0,02	85
	M-6	5,5	950	83	0,77	12,35	55,3	4,5	1,9	2,1	13	0,028	96
St 1.ZK 160	**M-6**	7,5	950	84	0,78	16,5	75	5,5	2,0	2,4	16	0,049	90
	L-6	11	950	86	0,78	24	110	6,0	2,2	2,5	16	0,070	120
St 1.ZK 180	**L-6**	15	960	87,5	0,83	29	149	6,0	2,2	2,7	16	0,144	150
St 1.ZK 200	**Lk-6**	18,5	970	89	0,83	36	182	6,5	2,0	2,7	16	0,225	205
	L-6	22	970	90	0,83	43	417	6,5	2,0	2,7	16	0,27	230
St 1.ZK 225	**M-6**	30	975	91	0,84	57	494	6,5	2,0	2,7	16	0,656	330
St 1.ZK 250	**M-6**	37	980	91	0,85	69	361	6,0	2,0	2,2	13	0,9	390
St 1.ZK 280	**S-6**	45	982	92,5	0,87	82	438	6,9	2,4	2,8	16	1,5	500
	M-6	55	985	93	0,87	98	533	6,9	2,3	2,6	16	1,82	560
St 1.ZK 315	**S-6**	75	985	93	0,87	135	727	7,5	2,4	2,7	16	2,7	750
	M-6	90	985	93,5	0,88	159	872	7,5	2,4	2,7	16	3,2	900

750 min^{-1}, 400 V, 50 Hz, Insulation class: F, Mechanical protection IP 55

Type		Output [kW]	n [min^{-1}]	η [%]	cos φ	I_N [A]	M_N [Nm]	$\frac{I_P}{I_N}$	$\frac{M_P}{M_N}$	$\frac{M_m}{M_N}$	KR	J [kgm^4]	Mass [kg]
St 1.ZK 71	**A-8**	0,09	670	43	0,50	0,60	1,28	2,2	1,8	2,0	16	0,00055	18
	B-8	0,12	680	46	0,50	0,75	1,68	2,0	1,9	2,2	16	0,00071	20
St 1.ZK 80	**A-8**	0,18	680	55	0,55	0,86	2,53	2,8	2,2	2,5	16	0,0018	24
	B-8	0,25	690	57	0,56	1,13	3,46	2,8	2,3	2,5	16	0,0024	26
St 1.ZK 90	**S-8**	0,37	700	59	0,62	1,45	5,05	2,9	1,9	2,0	13	0,0037	29
	L-8	0,55	700	61	0,61	2,13	7,50	3,0	2,1	2,3	13	0,0054	31
St 1.ZK 100	**L-8**	0,75	690	64	0,67	2,52	10,4	3,7	2,0	2,4	13	0,0054	41
	Ld-8	1,1	670	64	0,70	3,52	15,7	3,5	2,1	2,4	13	0,0071	50
St 1.ZK 112	**M-8**	1,5	680	70	0,71	4,37	21,0	3,6	2,0	2,2	13	0,012	58
St 1.ZK 132	**S-8**	2,2	705	76	0,69	6,08	29,8	3,6	1,6	2,0	13	0,015	77
	M-8	3	710	79	0,69	7,89	40,4	3,5	1,6	1,9	13	0,028	96
St 1.ZK 160	**Mk-8**	4	690	78	0,68	10,8	54	4,7	2,1	2,4	13	0,037	87
	M-8	5,5	700	79	0,68	14,7	74	4,7	2,1	2,4	13	0,053	91,5
	L-8	7,5	710	81	0,70	19	101	4,9	2,1	2,4	13	0,076	122
St 1.ZK 180	**L-8**	11	715	84	0,74	25	148	4,8	2,1	2,3	13	0,16	160
St 1.ZK 200	**L-8**	15	720	87	0,73	34	199	5,5	2,0	2,4	13	0,225	205
St 1.ZK 225	**S-8**	18,5	735	88,5	0,78	39	240	5,3	1,9	2,4	13	0,47	245
	M-8	22	735	89,5	0,77	45,5	286	5,3	1,8	2,5	13	0,56	285
St 1.ZK 250	**M-8**	30	735	90	0,80	61	390	5,5	1,8	2,4	13	0,87	370
St 1.ZK 280	**S-8**	37	735	92	0,80	72	481	5,6	1,8	2,2	13	1,5	495
	M-8	45	735	92	0,81	87	585	5,6	1,8	2,2	13	1,82	580
St 1.ZK 315	**S-8**	55	740	92,5	0,82	104	710	7,1	2,0	3,0	13	2,56	750
	M-8	75	740	93	0,83	141	970	6,6	1,8	4,8	13	3,32	870

I_n - Rated Current

I_p - Locked-rotor Current

M_n - Rated Torque

M_m - Breakdown Torque

M_p - Locked-rotor Torque

KR - Rotor class

3.4 TECHNICAL DATA FOR TWO-SPEED MOTORS SELECTION

400 V, 50 Hz, Insulation class: F, Mechanical protection IP 55, Temperature class T1-T4

Dahlander winding Δ/YY

1500/3000 min^{-1}

Type		Output [kW]		n [min^{-1}]	
		2p=4	2p=2	2p=4	2p=2
St 1.ZK 71	**A-4/2**	0,21	0,28	1400	2800
	B-4/2	0,3	0,43	1410	2840
St 1.ZK 80	**A-4/2**	0,48	0,6	1410	2720
	B-4/2	0,7	0,85	1405	2800
St 1.ZK 90	**S-4/2**	1,0	1,4	1400	2800
	L-4/2	1,3	1,75	1400	2780
St 1.ZK 100	**L-4/2**	1,8	2,4	1400	2790
	Ld-4/2	2,4	3,0	1400	2800
St 1.ZK 112	**M-4/2**	3,0	4,0	1400	2830
St 1.ZK 132	**S-4/2**	4,5	5,7	1440	2830
	M-4/2	6,1	7,5	1450	2860
St 1.ZK 160	**M-4/2**	9	10,5	1450	2920
	L-4/2	12	15	1450	2920
St 1.ZK 180	**M-4/2**	14	17	1460	2920
	L-4/2	17	20	1460	2940
St 1.ZK 200	**L-4/2**	20	26	1460	2940
St 1.ZK 225	**S-4/2**	24	28	1480	2940
	M-4/2	29	34	1480	2970
St 1.ZK 250	**M-4/2**	36	45	1480	2970

750/1500 min^{-1}

Type		Output [kW]		n [min^{-1}]	
		2p=8	2p=4	2p=8	2p=4
St 1.ZK 80	**A-8/4**	0,14	0,28	680	1400
	B-8/4	0,22	0,37	680	1420
St 1.ZK 90	**S-8/4**	0,42	0,8	680	1390
	L-8/4	0,5	1,0	680	1390
St 1.ZK 100	**L-8/4**	0,8	1,6	680	1390
	Ld-8/4	1,0	1,9	670	1390
St 1.ZK 112	**M-8/4**	1,3	2,3	690	1300
St 1.ZK 132	**S-8/4**	2,2	3,4	700	1400
	M-8/4	2,7	4,3	710	1450
St 1.ZK 160	**Mk-8/4**	4	5,5	710	1440
	M-8/4	4,6	7,3	712	1440
	L-8/4	6,8	11	712	1440
St 1.ZK 180	**L-8/4**	11	15	712	1455
St 1.ZK 200	**L-8/4**	15	20	725	1470
St 1.ZK 225	**S-8/4**	18	24	735	1480
	M-8/4	22	28	735	1480
St 1.ZK 250	**M-8/4**	30	42	740	1480

With two separate windings Y/Y

1000/1500 min^{-1}

Type		Output [kW]		n [min^{-1}]	
		2p=6	2p=4	2p=6	2p=4
St 1.ZK 80	**A-6/4**	0,22	0,32	940	1415
	B-6/4	0,26	0,4	940	1440
St 1.ZK 90	**S-6/4**	0,45	0,66	940	1440
	L-6/4	0,6	0,9	940	1440
St 1.ZK 100	**L-6/4**	0,9	1,3	940	1440
St 1.ZK 112	**M-6/4**	1,2	1,8	940	1440
St 1.ZK 132	**S-6/4**	1,7	2,7	960	1440
	M-6/4	2,4	3,7	965	1450
St 1.ZK 160	**M-6/4**	3,8	5,7	965	1460
	L-6/4	5,5	8	970	1460
St 1.ZK 180	**M-6/4**	7,5	11	970	1480
	L-6/4	9	13	970	1470
St 1.ZK 200	**L-6/4**	13	19	980	1470
St 1.ZK 225	**S-6/4**	19	23	985	1480
	M-6/4	23	27	985	1480
St 1.ZK 250	**M-6/4**	27	32	985	1485

750/1000 min^{-1}

Type		Output [kW]		n [min^{-1}]	
		2p=8	2p=6	2p=8	2p=6
St 1.ZK 90	**S-8/6**	0,35	0,45	690	945
	L-8/6	0,45	0,6	690	945
St 1.ZK 100	**L-8/6**	0,6	0,8	680	940
	Ld-8/6	0,75	0,9	700	960
St 1.ZK 112	**M-8/6**	0,9	1,2	700	950
St 1.ZK 132	**S-8/6**	1,4	2	710	960
	M-8/6	2,2	3	715	970
St 1.ZK 160	**M-8/6**	3,5	5	715	970
	L-8/6	5	7	715	970
St 1.ZK 180	**L-8/6**	7	9,5	730	980
St 1.ZK 200	**L-8/6**	10	13	730	980
St 1.ZK 225	**L-8/6**	13	16	730	985
	S-8/6	17	22	735	985
St 1.ZK 250	**M-8/6**	22	30	735	985

It is important to indicate supply voltage and frequency when ordering certain motor designs.

3.5 OUTLINE DRAWINGS

Type: **St 1.ZK**
Protection: **EExd I, EExde II B**
Temperature class: **T1 - T4**

IM B3 - IM 1001

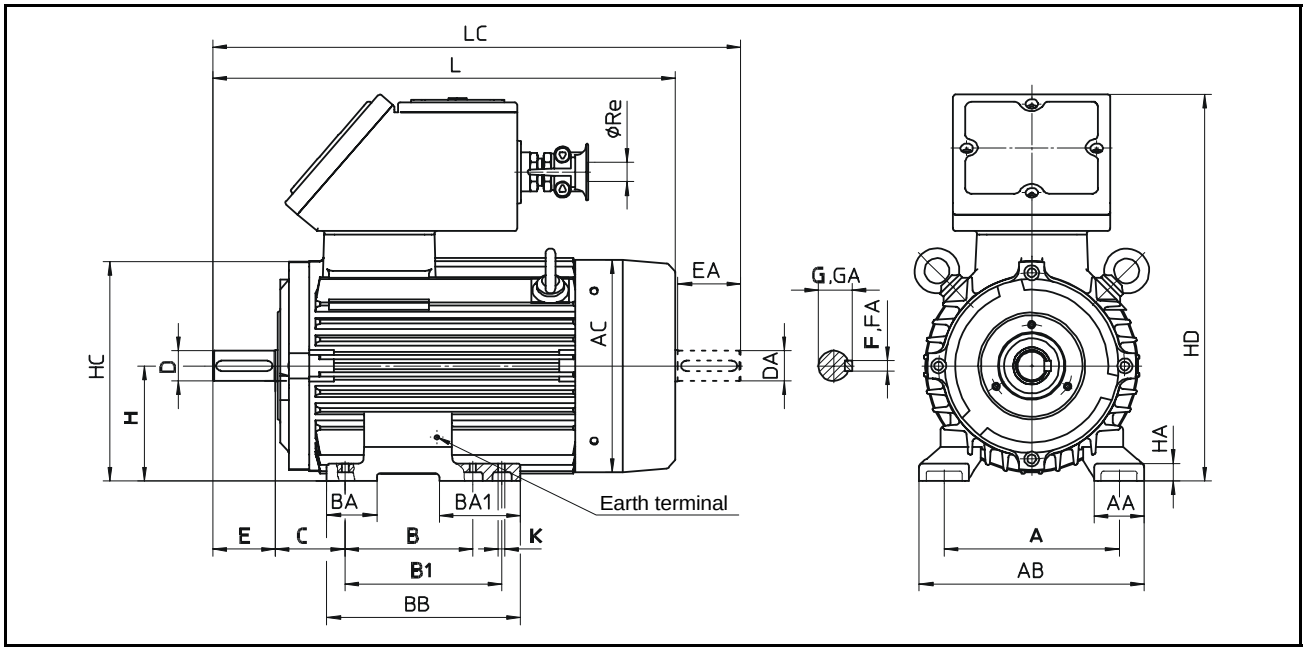

Type		Pole	A	AA	AB	AC	B	B1	BA	BA1	BB	C	D	DA	E	EA	F	FA	GA	GC	H	HA	HC	HD	K	L	LC	Cable gland with trumpet
St 1.ZK 71		2,4,6,8	**112**	34	142	140	**90**	-	-	-	114	**45**	**14**	14	**30**	30	**5**	5	**16**	16	**71**	8	142	242	**7**	278	310	Re 16
St 1.ZK 80		2,4,6,8	**125**	38	155	154	**100**	-	-	-	130	**50**	**19**	19	**40**	40	**6**	6	**21,5**	21,5	**80**	9	157	262	**10**	316	358	Re 16
St 1.ZK 90	**S**	2,4,6,8	**140**	40	180	170	**100**	-	40	65	155	**56**	**24**	24	**50**	50	**8**	8	**27**	27	**90**	12	174	306	**10**	370	422	Re 16
	L						-	**125**																				
St 1.ZK 100	**L**	2,4,6,8	**160**	46	204	193	**140**	-	50	50	175	**63**	**28**	28	**60**	60	**8**	8	**31**	31	**100**	14	195	326	**12**	432	494	Re 16
	Ld	4,6,8																										
St 1.ZK 112	**M**	2,4,6,8	**190**	46	236	216	**140**	-	50	50	175	**70**	**28**	28	**60**	60	**8**	8	**31**	31	**112**	16	218	345	**12**	435	497	Re 21
St 1.ZK 132	**Sk**	2	**216**	55	271	247	**140**	-	50	93	218	**89**	**38**	38	**80**	80	**10**	10	**41**	41	**132**	20	250	378	**12**	535	617	Re 21
	S	2,4,6,8																										
	Mk	6					-	**178**																				
	M	4,6,8																										

Mounting dimensions given in bold figures are obligatory in the sense of IEC recommendations.

Type: **St 1.ZK**
Protection: **EExd II C**
Temperature class: **T1 - T4**

IM B3 - IM 1001

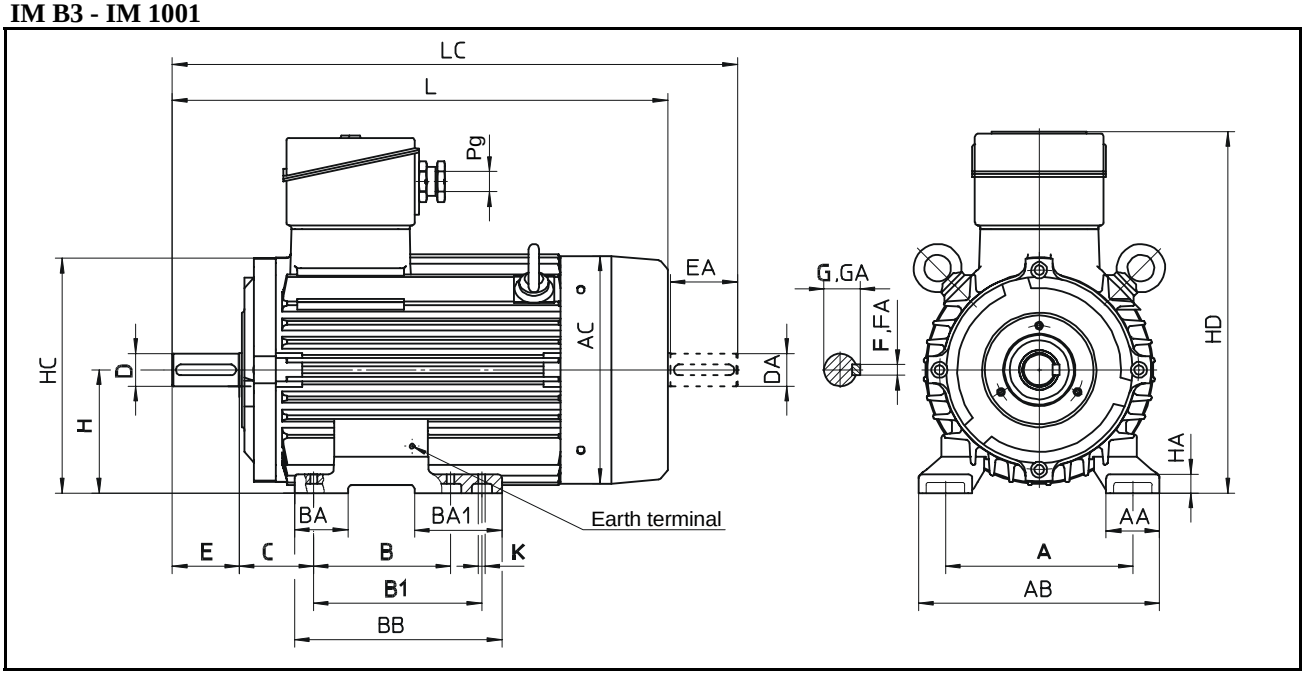

Type		Pole	A	AA	AB	AC	B	B1	BA	BA1	BB	C	D	DA	E	EA	F	FA	GA	GC	H	HA	HC	HD	K	L	LC	Cable gland
St 1.ZK 71		2,4,6,8	**112**	34	142	140	**90**	-	-	-	114	**45**	**14**	14	**30**	30	**5**	5	**16**	16	**71**	8	142	218	**7**	278	310	Pg 13,5
St 1.ZK 80		2,4,6,8	**125**	38	155	154	**100**	-	-	-	130	**50**	**19**	19	**40**	40	**6**	6	**21,5**	21,5	**80**	9	157	236	**10**	316	358	Pg 13,5
St 1.ZK 90	**S**	2,4,6,8	**140**	40	180	170	**100**	-	40	65	155	**56**	**24**	24	**50**	50	**8**	8	**27**	27	**90**	12	174	282	**10**	370	422	Pg 13,5
	L							**125**																				
St 1.ZK 100	**L**	2,4,6,8	**160**	46	204	193	**140**	-	50	50	175	**63**	**28**	28	**60**	60	**8**	8	**31**	31	**100**	14	195	298	**12**	432	494	Pg 13,5
	Ld	4,6,8																										
St 1.ZK 112	**M**	2,4,6,8	**190**	46	236	216	**140**	-	50	50	175	**70**	**28**	28	**60**	60	**8**	8	**31**	31	**112**	16	218	327	**12**	435	497	Pg 21
St 1.ZK 132	**Sk**	2	**216**	55	271	247	**140**	-	50	93	218	**89**	**38**	38	**80**	80	**10**	10	**41**	41	**132**	20	250	360	**12**	535	617	Pg 21
	S	2,4,6,8																										
	Mk	6					-	**178**																				
	M	4,6,8																										

Mounting dimensions given in bold figures are obligatory in the sense of IEC recommendations.

Type: **St 1.ZK**
Protection: **EExd I, EExde II B**
Temperature class: **T1 - T4**

IM B5 - IM 3001

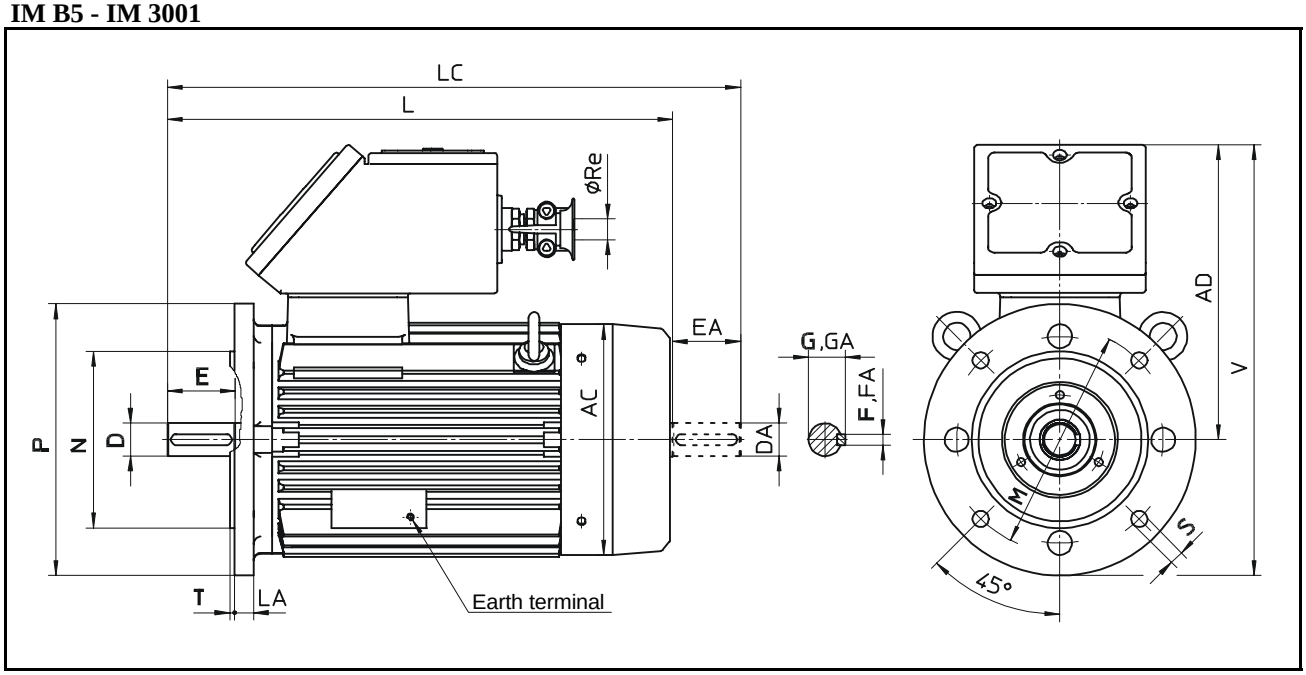

Type		Pole	Flange	AC	AD	D	DA	E	EA	F	FA	GA	GC	L	LA	LC	M	N	P	S	Num.of holes	T	V	Cable gland with trumpet
St 1.ZK 71		2,4,6,8	FF 130	140	171	**14**	14	**30**	30	**5**	5	**16**	16	278	12	310	**130**	**110**	**160**	**10**	4	**3,5**	251	Re 16
St 1.ZK 80		2,4,6,8	FF165	154	182	**19**	19	**40**	40	**6**	6	**21,5**	21,5	316	14	358	**165**	**130**	**200**	**12**	4	**3,5**	282	Re 16
St 1.ZK 90	**S**	2,4,6,8	FF 165	170	216	**24**	24	**50**	50	**8**	8	**27**	27	370	16	422	**165**	**130**	**200**	**12**	4	**3,5**	316	Re 16
	L																							
St 1.ZK 100	**L**	2,4,6,8	FF 215	193	226	**28**	28	**60**	60	**8**	8	**31**	31	432	18	494	**215**	**180**	**250**	**15**	4	**4**	351	Re 16
	Ld	4,6,8																						
St 1.ZK 112	**M**	2,4,6,8	FF 215	216	233	**28**	28	**60**	60	**8**	8	**31**	31	435	18	497	**215**	**180**	**250**	**15**	4	**4**	358	Re 21
St 1.ZK 132	**Sk**	2	FF 265	247	246	**38**	38	**80**	80	**10**	10	**41**	41	535	18	617	**265**	**230**	**300**	**15**	4	**4**	396	Re 21
	S	2,4,6,8																						
	Mk	6																						
	M	4,6,8																						

Mounting dimensions given in bold figures are obligatory in the sense of IEC recommendations.

Type: **St 1.ZK**
Protection: **EExde II C**
Temperature class: **T1 - T4**

IM B5 - IM 3001

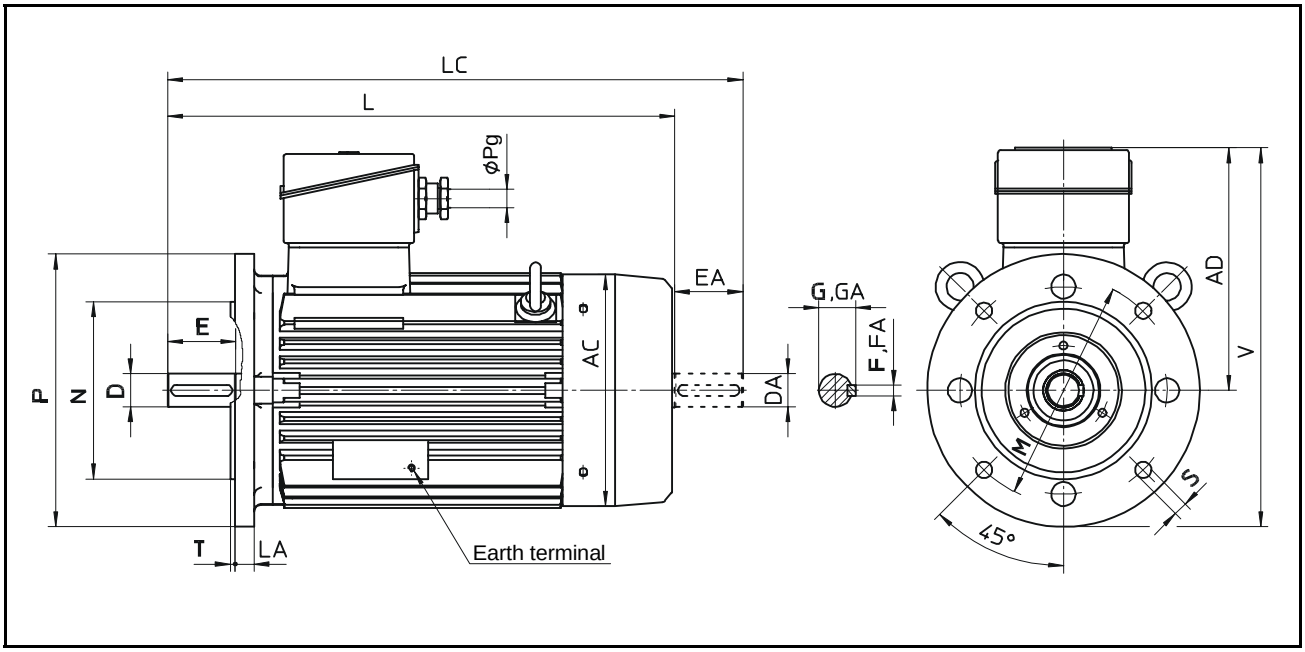

Type		Pole	Flange	AC	AD	D	DA	E	EA	F	FA	GA	GC	L	LA	LC	M	N	P	S	Num.of holes	T	V	Cable gland
St 1.ZK 71		2,4,6,8	FF 130	140	147	**14**	14	**30**	30	**5**	5	**16**	16	278	12	310	**130**	**110**	**160**	**10**	4	**3,5**	227	Pg 13,5
St 1.ZK 80		2,4,6,8	FF165	154	156	**19**	19	**40**	40	**6**	6	**21,5**	21,5	316	14	358	**165**	**130**	**200**	**12**	4	**3,5**	256	Pg 13,5
St 1.ZK 90	**S**	2,4,6,8	FF 165	170	192	**24**	24	**50**	50	**8**	8	**27**	27	370	16	422	**165**	**130**	**200**	**12**	4	**3,5**	292	Pg 13,5
	L																							
St 1.ZK 100	**L**	2,4,6,8	FF 215	193	198	**28**	28	**60**	60	**8**	8	**31**	31	432	18	494	**215**	**180**	**250**	**15**	4	**4**	323	Pg 13,5
	Ld	4,6,8																						
St 1.ZK 112	**M**	2,4,6,8	FF 215	216	215	**28**	28	**60**	60	**8**	8	**31**	31	435	18	497	**215**	**180**	**250**	**15**	4	**4**	340	Pg 21
St 1.ZK 132	**Sk**	2	FF 265	247	228	**38**	38	**80**	80	**10**	10	**41**	41	535	18	617	**265**	**230**	**300**	**15**	4	**4**	378	Pg 21
	S	2,4,6,8																						
	Mk	6																						
	M	4,6,8																						

Mounting dimensions given in bold figures are obligatory in the sense of IEC recommendations.

Type: **St 1.ZK**
Protection: **EExd I, EExde II B**
Temperature class: **T1 - T4**

IM B3 - IM 1001

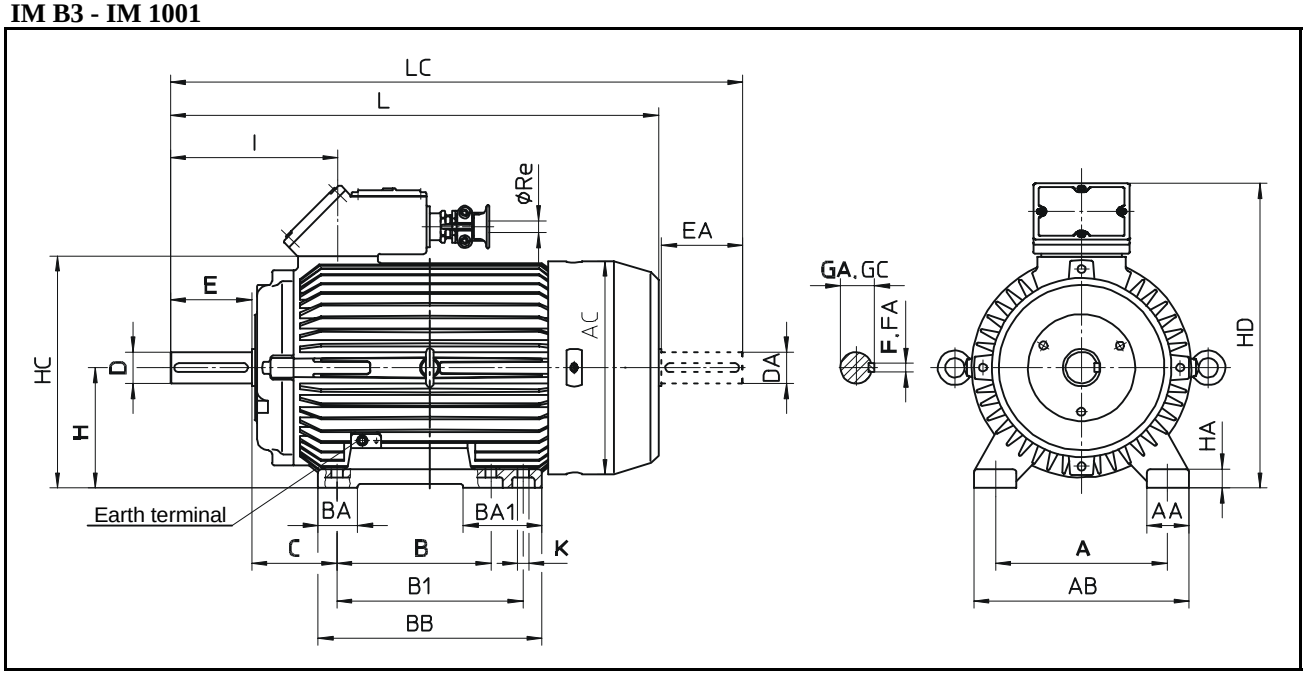

Type		Pole	A	AA	AB	AC	B	B1	BA	BA1	BB	C	D	DA	E	EA	F	FA	GA	GC	H	HA	HC	HD	I	K	L	LC	Cable gland with trumpet
St 1.ZK 160	**Mk**	2,8	**254**	60	314	285	**210**	-	65	103	304	**108**	**42**	42	**110**	110	**12**	12	**45**	45	**160**	23	268	385	175	**15**	670	790	Re 29
	M	2,4,6,8																											
	L						-	**254**																					
St 1.ZK 180	**M**	2,4	**279**	70	349	323	**241**	-	55	92	334	**121**	**48**	48	**110**	110	**14**	14	**51,5**	51,5	**180**	28	338	455	192	**15**	726	846	Re29
	L	4,6,8					-	**279**																					
St 1.ZK 200	**Lk**	2,6	**318**	80	398	369	-	**305**	95	95	375	**133**	**55**	55	**110**	110	**16**	16	**59**	59	**200**	30	423	534	272	**18**	826	951	Re 36
	L	2,4,6,8																											
St 1.ZK 225	**S**	4,8	**356**	90	446	411	**286**	-	84	100	380	**149**	**60**	60	**140**	140	**18**	18	**64**	64	**225**	35	455	590	264	**18**	860	1015	Re 36
	M	2					-	**311**					**55**	55	**110**	110	**16**	16	**59**	59					234		830	955	
		4,6,8											**60**	60	**140**	140	**18**	18	**64**	64					264		860	1015	
St 1.ZK 250	**M**	2	**406**	96	506	474	-	**349**	95	133	430	**168**	**60**	60	**140**	140	**18**	18	**64**	64	**250**	40	543	723	340	**24**	940	1095	Re 36
		4,6,8											**65**	65					**69**	69									
St 1.ZK 280	**S**	2	**457**	110	567	510	**368**	-	110	150	500	**190**	**65**	65	**140**	140	**18**	18	**69**	69	**280**	45	598	784	340	**24**	1065	1220	Re 36
		4,6,8											**75**	75			**20**	20	**79,5**	79,5									
	M	2					-	**419**					**65**	65			**18**	18	**69**	69									
		4,6,8											**75**	75			**20**	20	**79,5**	79,5									
St 1.ZK 315	**S**	2	**508**	125	633	562	**406**	-	120	170	550	**216**	**65**	65	**140**	140	**18**	18	**69**	69	**315**	50	690	887	380	**28**	1170	1325	Re 42
		4,6,8											**80**	80	**170**	170	**22**	22	**85**	85					410		1200	1385	
	M	2					-	**457**					**65**	65	**140**	140	**18**	18	**69**	69					380		1170	1325	
		4,6,8											**80**	80	**170**	170	**22**	22	**85**	85					410		1200	1385	

On a special request, motors of frame size **200** to **315** are also available in explosion-proof protection **EExd II C**!
On a special request, motors of frame size **160** to **315** are also available in temperature class **T5**!
Mounting dimensions given in bold figures are obligatory in the sense of IEC recommendations.

Type: **St 1.ZK**
Protection: **EExde II B**
Temperature class: **T1 - T4**

IM B3 - IM 1001

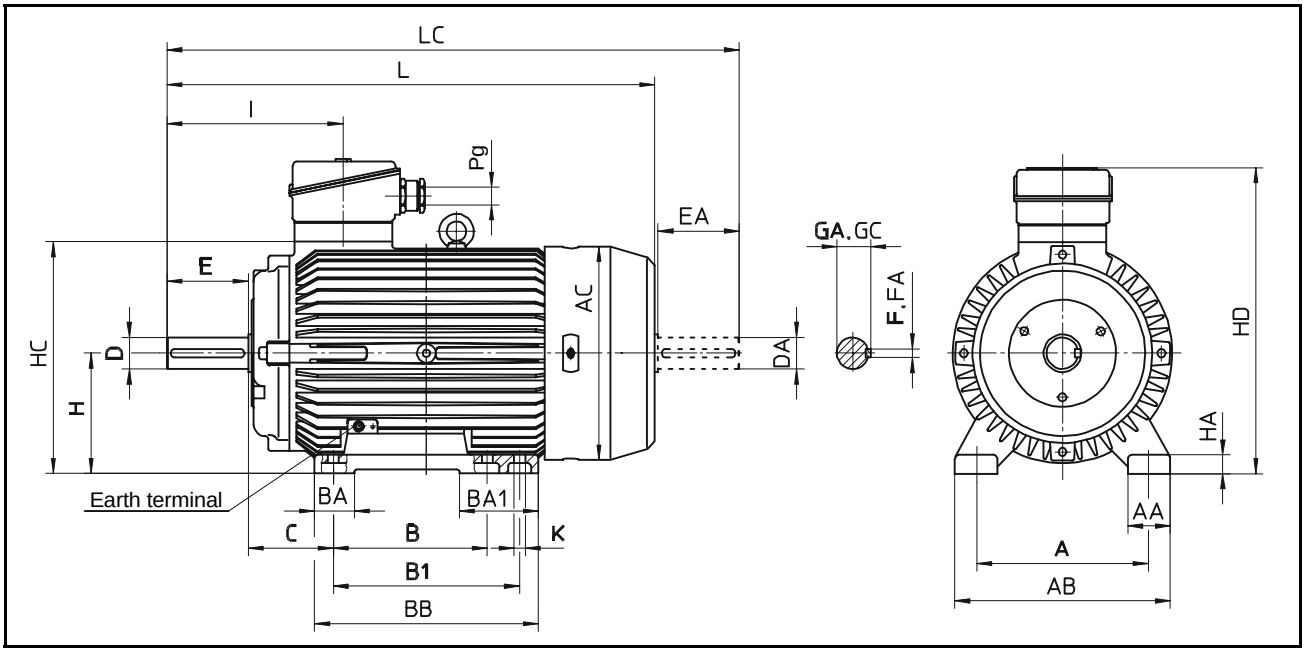

Type		Pole	A	AA	AB	AC	B	B1	BA	BA1	BB	C	D	DA	E	EA	F	FA	GA	GC	H	HA	HC	HD	I	K	L	LC	Cable gland
St 1.ZK 160	**Mk**	2,8	**254**	60	314	285	**210**	-	65	103	304	**108**	**42**	42	**110**	110	**12**	12	**45**	45	**160**	23	268	385	175	**15**	650	770	Pg 29
	M	2,4,6,8																											
	L						-	**254**																					
St 1.ZK 180	**M**	2,4	**279**	70	349	323	**241**	-	55	92	334	**121**	**48**	48	**110**	110	**14**	14	**51,5**	51,5	**180**	28	338	455	192	**15**	706	826	Pg 29
	L	4,6,8					-	**279**																					
St 1.ZK 200	**Lk**	2,6	**318**	80	398	369	-	**305**	95	95	375	**133**	**55**	55	**110**	110	**16**	16	**59**	59	**200**	30	423	534	272	**18**	806	931	Pg 36
	L	2,4,6,8																											
St 1.ZK 225	**S**	4,8	**356**	90	446	411	**286**	-	84	100	380	**149**	**60**	60	**140**	140	**18**	18	**64**	64	**225**	35	455	590	264	**18**	840	995	Pg 36
	M	2					-	**311**					**55**	55	**110**	110	**16**	16	**59**	59					234		810	935	
		4,6,8											**60**	60	**140**	140	**18**	18	**64**	64					264		840	995	
St 1.ZK 250	**M**	2	**406**	96	506	474	-	**349**	95	133	430	**168**	**60**	60	**140**	140	**18**	18	**64**	64	**250**	40	543	723	340	**24**	920	1075	Pg 36
		4,6,8											**65**	65					**69**	69									
St 1.ZK 280	**S**	2	**457**	110	567	510	**368**	-	110	150	500	**190**	**65**	65	**140**	140	**18**	18	**69**	69	**280**	45	598	784	340	**24**	1045	1200	Pg 36
		4,6,8											**75**	75			**20**	20	**79,5**	79,5									
	M	2					-	**419**					**65**	65			**18**	18	**69**	69									
		4,6,8											**75**	75			**20**	20	**79,5**	79,5									
St 1.ZK 315	**S**	2	**508**	125	633	562	**406**	-	120	170	550	**216**	**65**	65	**140**	140	**18**	18	**69**	69	**315**	50	690	887	380	**28**	1150	1305	Pg 42
		4,6,8											**80**	80	**170**	170	**22**	22	**85**	85					410		1180	1365	
	M	2					-	**457**					**65**	65	**140**	140	**18**	18	**69**	69					380		1150	1305	
		4,6,8											**80**	80	**170**	170	**22**	22	**85**	85					410		1180	1365	

On a special request, motors of frame size **200** to **315** are also available in explosion-proof protection **EExd II C**!
On a special request, motors of frame size **160** to **315** are also available in temperature class **T5**!
Mounting dimensions given in bold figures are obligatory in the sense of IEC recommendations.

Type: **St 1.ZK**
Protection: **EExd I, EExde II B**
Temperature class: **T1 - T4**

IM B5 - IM 3001

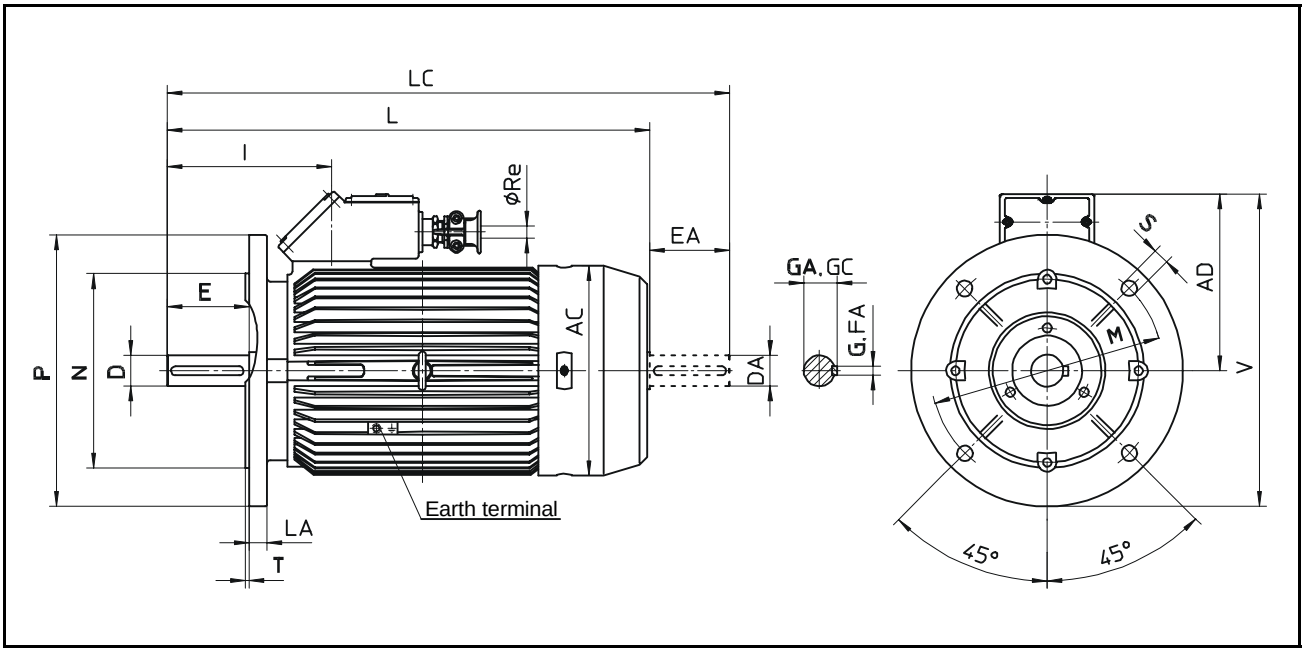

Type		Pole	Flange	AC	AD	D	DA	E	EA	F	FA	GA	GC	I	L	LA	LC	M	N	P	S	Num.of holes	T	V	Cable gland with trumpet
St 1.ZK 160	**Mk**	2,8	FF 300	285	225	**42**	42	**110**	110	**12**	12	**45**	45	175	670	23	790	**300**	**250**	**350**	**19**	4	**5**	400	Re 29
	M	2,4,6,8																							
	L																								
St 1.ZK 180	**M**	2,4	FF 300	323	275	**48**	48	**110**	110	**14**	14	**51,5**	51,5	192	726	23	846	**300**	**250**	**350**	**19**	4	**5**	450	Re29
	L	4,6,8																							
St 1.ZK 200	**Lk**	2,6	FF 350	369	334	**55**	55	**110**	110	**16**	16	**59**	59	272	826	23	951	**350**	**300**	**400**	**19**	4	**5**	534	Re 36
	L	2,4,6,8																							
St 1.ZK 225	**S**	4,8	FF 400	411	371	**60**	60	**140**	140	**18**	18	**64**	64	264	860	23	1015	**400**	**350**	**450**	**18**	8	**5**	596	Re 36
	M	2				**55**	55	**110**	110	**16**	16	**59**	59	234	830		955								
		4,6,8				**60**	60	**140**	140	**18**	18	**64**	64	264	860		1015								
St 1.ZK 250	**M**	2	FF 500	474	473	**60**	60	**140**	140	**18**	18	**64**	64	340	940	25	1095	**500**	**450**	**550**	**19**	8	**5**	748	Re 36
		4,6,8				**65**	65					**69**	69												
St 1.ZK 280	**S**	2	FF 500	510	504	**65**	65	**140**	140	**18**	18	**69**	69	340	1065	25	1220	**500**	**450**	**550**	**19**	8	**5**	779	Re 36
		4,6,8				**75**	75			**20**	20	**79,5**	79,5												
	M	2				**65**	65			**18**	18	**69**	69												
		4,6,8				**75**	75			**20**	20	**79,5**	79,5												
St 1.ZK 315	**S**	2	FF 600	562	572	**65**	65	**140**	140	**18**	18	**69**	69	380	1170	25	1325	**600**	**550**	**660**	**24**	8	**6**	902	Re 42
		4,6,8				**80**	80	**170**	170	**22**	22	**85**	85	410	1200		1385								
	M	2				**65**	65	**140**	140	**18**	18	**69**	69	380	1170		1325								
		4,6,8				**80**	80	**170**	170	**22**	22	**85**	85	410	1200		1385								

On a special request, motors of frame size **200** to **315** are also available in explosion-proof protection **EExd II C**!
On a special request, motors of frame size **160** to **315** are also available in temperature class **T5**!
Mounting dimensions given in bold figures are obligatory in the sense of IEC recommendations.

Type: **St 1.ZK**
Protection: **EExde II B**
Temperature class: **T1 - T4**

IM B5 - IM 3001

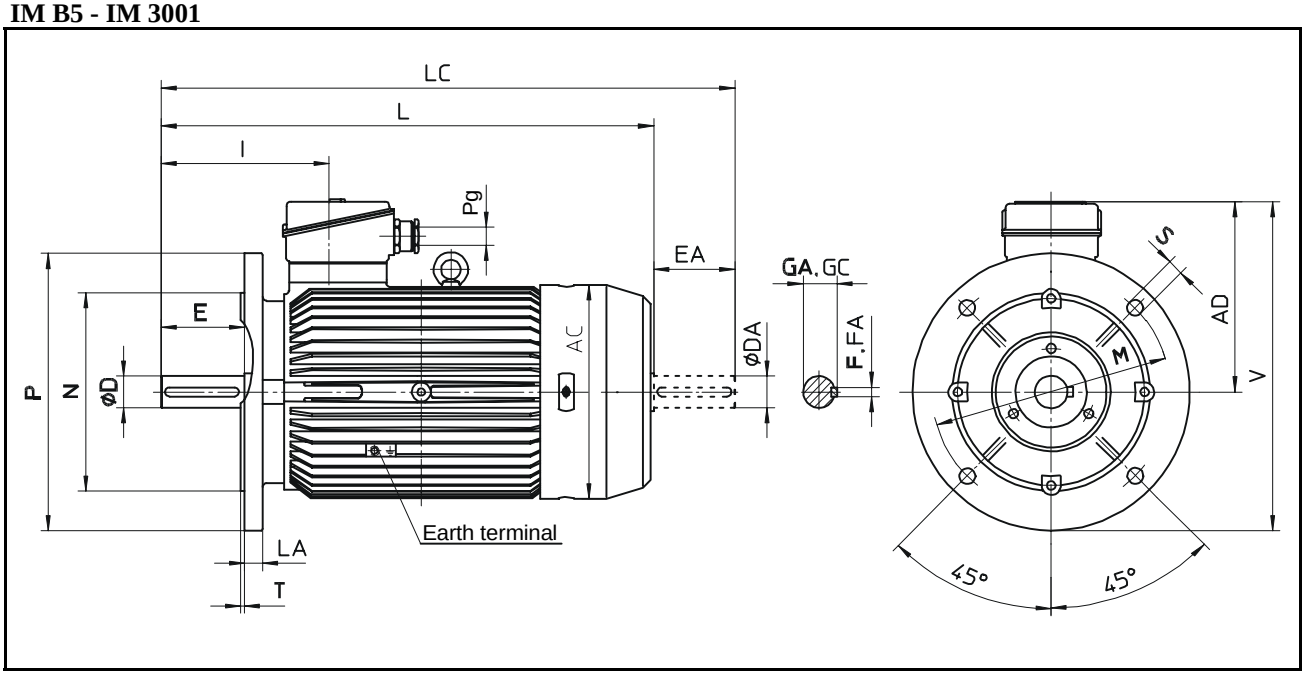

Type		Pole	Flange	AC	AD	D	DA	E	EA	F	FA	GA	GC	I	L	LA	LC	M	N	P	S	Num.of holes	T	V	Cable gland
St 1.ZK 160	**Mk**	2,8	FF 300	285	225	**42**	42	**110**	110	**12**	12	**45**	45	175	650	23	770	**300**	**250**	**350**	**19**	4	**5**	400	Pg 29
	M	2,4,6,8																							
	L																								
St 1.ZK 180	**M**	2,4	FF 300	323	275	**48**	48	**110**	110	**14**	14	**51,5**	51,5	192	706	23	826	**300**	**250**	**350**	**19**	4	**5**	450	Pg 29
	L	4,6,8																							
St 1.ZK 200	**Lk**	2,6	FF 350	369	334	**55**	55	**110**	110	**16**	16	**59**	59	272	806	23	931	**350**	**300**	**400**	**19**	4	**5**	534	Pg 36
	L	2,4,6,8																							
St 1.ZK 225	**S**	4,8	FF 400	411	371	**60**	60	**140**	140	**18**	18	**64**	64	264	860	23	995	**400**	**350**	**450**	**18**	8	**5**	596	Pg 36
	M	2				**55**	55	**110**	110	**16**	16	**59**	59	234	810		935								
		4,6,8				**60**	60	**140**	140	**18**	18	**64**	64	264	860		995								
St 1.ZK 250	**M**	2	FF 500	474	473	**60**	60	**140**	140	**18**	18	**64**	64	340	940	25	1075	**500**	**450**	**550**	**19**	8	**5**	748	Pg 36
		4,6,8				**65**	65					**69**	69												
St 1.ZK 280	**S**	2	FF 500	510	504	**65**	65	**140**	140	**18**	18	**69**	69	340	1065	25	1200	**500**	**450**	**550**	**19**	8	**5**	779	Pg 36
		4,6,8				**75**	75			**20**	20	**79,5**	79,5												
	M	2				**65**	65			**18**	18	**69**	69												
		4,6,8				**75**	75			**20**	20	**79,5**	79,5												
St 1.ZK 315	**S**	2	FF 600	562	572	**65**	65	**140**	140	**18**	18	**69**	69	380	1170	25	1305	**600**	**550**	**660**	**24**	8	**6**	902	Pg 42
		4,6,8				**80**	80	**170**	170	**22**	22	**85**	85	410	1200		1365								
	M	2				**65**	65	**140**	140	**18**	18	**69**	69	380	1170		1305								
		4,6,8				**80**	80	**170**	170	**22**	22	**85**	85	410	1200		1365								

On a special request, motors of frame size **200** to **315** are also available in explosion-proof protection **EExd II C**!
On a special request, motors of frame size **160** to **315** are also available in temperature class **T5**!
Mounting dimensions given in bold figures are obligatory in the sense of IEC recommendations.

3.6 PARTS

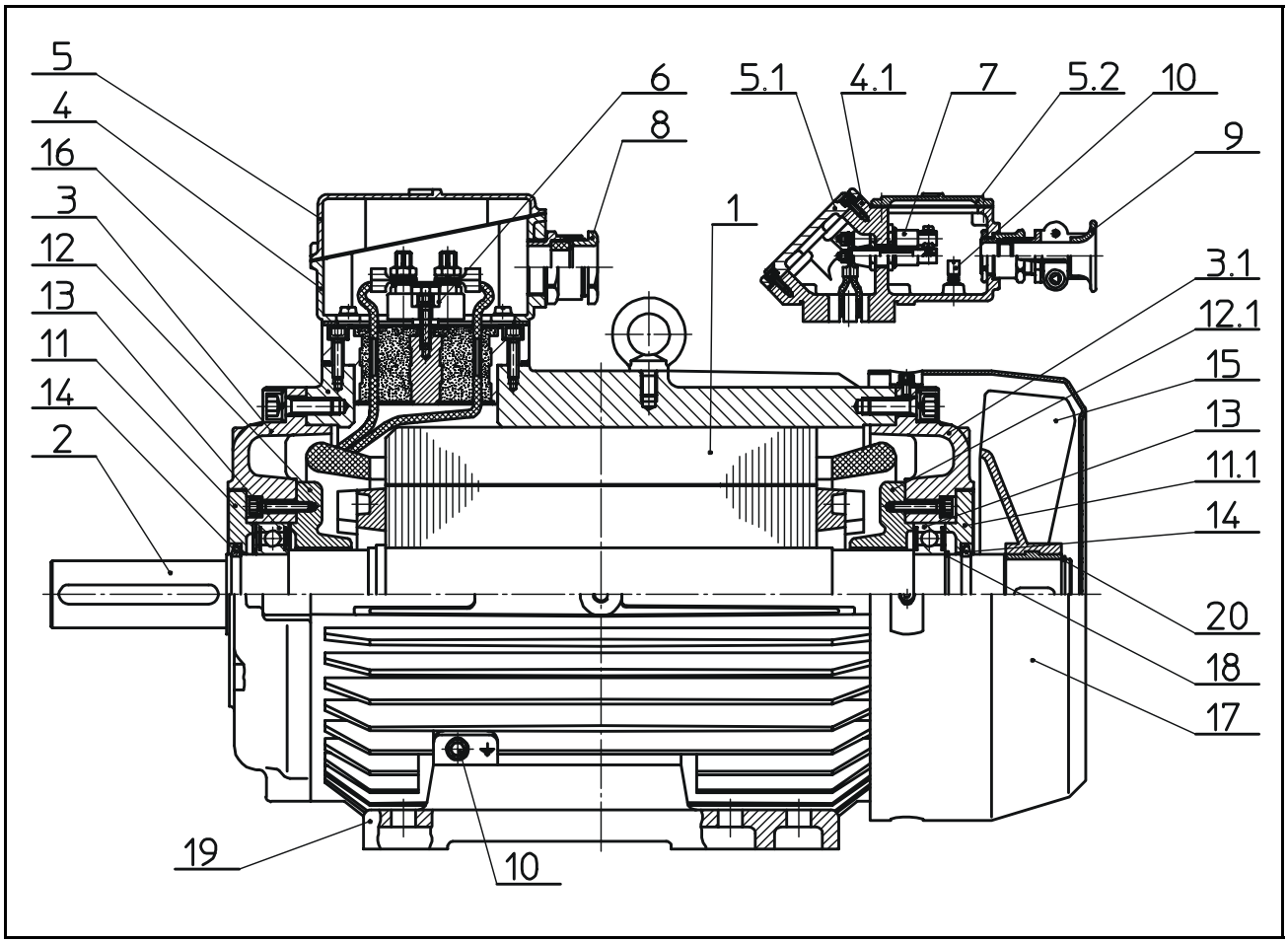

ITEM	DESCRIPTION
1.	STATOR
2.	ROTOR
3.	STATOR COVER - DRIVE SIDE
3.1	STATOR COVER - FAN SIDE
4.	TERMINAL BOX FRAME
4.1	TERMINAL BOX FRAME
5.	TERMINAL BOX COVER
5.1	TERMINAL BOX COVER
5.2	TERMINAL BOX COVER
6.	TERMINAL BOARD WITH ACCESSORIES
7.	FLAMEPROOF BUSHING
8.	CABLE GLAND
9.	CABLE GLAND WITH TRUMPET
10.	EARTH TERMINAL
11.	BEARING COVER, EXTERNAL - DRIVE SIDE
11.1	BEARING COVER, EXTERNAL - FAN SIDE
12.	BEARING COVER, INTERNAL - DRIVE SIDE
12.1	BEARING COVER, INTERNAL - FAN SIDE
13.	BEARING
14.	SHAFT SEAL
15.	FAN
16.	INTERPLATE OF TERMINAL BOX
17.	FAN COVER
18.	CIRCLIP
19.	FOOT
20.	CIRCLIP

QUESTIONNAIRE FOR THE OFFER OF ASYNCHRONOUS ELECTRIC MOTORS

ATB SEVER
Technology in Motion

Enquiry Number:

Customer: _____ ITEM: _____ Qty: _____

A MOTOR DATA

1 Motor type: Three phase: Single phase:
2 Rotor type: Squirrel cage: Slip-ring:
3 Rated output: P_N= _____ kW
4 Rated voltage: U_N= _____ V Connect: Star Delta
5 Rated frequency: f_N= _____ Hz
6 Rated speed: n_N= _____ rpm
7 Insulation class: F ☐ B ☐
8 Duty type:

	S1	S2	S3	S4	S5	S6	S7	S8	S9	S10
ED %										

starts /h _____ min _____ J_{mot} _____ kgm^2
9 Standard: _____ IEC or _____
10 Cooling method: _____ IC
11 Mounting arrengement: IM
12 Protection degree: Motor IP: _____ Terminal box IP: _____
13 *Sense of rotation: Left Right Both
14 Motor brake: yes ☐ no ☐
Braking moment: _____ Nm
Brake voltage: _____ V/Hz _____ V,DC
15 No-load regime? (single phase motor) yes no
16 Rotor data: U_{2c}= _____ V I_{2n}= _____ A

B DATA ABOUT THE DRIVEN MACHINE

1 Type:
2 Required power:
3 Required speed:
4 Load torque characteristic:
Constant: Squared _____ or _____

Speed %:	0	25	50	75	100
Torque Nm:					

5 Moment of inertia: J= _____ kgm^2
6 Running machine special data:

C AMBIENT CONDITIONS

1 Ambient temperature: C
2 Relative humidity: %
3 Altitude (above sea level): m
4 Specific ambient conditions:

You are kindly requested to provide us with as much data as possible thus enabling us to offer satisfactorily

D POWER TRANSMISSION AND STARTING CONDITIONS

1 Coupling type:
2 Starting:
3 Number of consecutive startings:
Hot state: Cold state:
_____ per hour _____ per hour
_____ per day _____ per day

E ADDITIONAL REQUESTS FOR MOTOR EXECUTION

1 Overloading from: _____ % P_N
Duration: _____ min
2 Temperature rise: F ☐ B ☐
3 Request for: vibration level _____ mm/s
noise level _____ db
4 *Terminal box position:
left ☐ right ☐ On top ☐
5 Additional shaft loading sense
axial force radial force
6 Converter feed operation: yes ☐ no ☐
Converter type: _____
Manufacturer: _____
Speed range: from _____ to _____ rpm
7 Sensor category (mark in lower field):
Taho gen. Encoder Absolute Resolver
_____ _____ _____
Sensor Type: _____
8 Flange size: _____ mm
9 Second shaft end: yes ☐ no ☐
DA= _____ mm EA= _____ mm
10 Other requests and limits:

F ADDITIONAL EQUIPMENT, SPARE PARTS AND DOCUMENTATION

1 Thermal protection: yes ☐ no ☐
Type: _____
2 Bearings thermometers yes ☐ no ☐
3 Anti-condesation heaters yes ☐ no ☐
4 Spare parts yes ☐ no ☐
5 Guarantee sheet yes ☐ no ☐
6 Language of instruction list:
7 Other requests for packing:

H CUSTOMER

1 Company:
2 Adress:
3 City:
4 Country:
5 Person:
6 Telefon / Telefax:
7 e-mail:

* OBSERVED FROM DRIVE END

ATB Group - a global player

a company of **A-TEC** INDUSTRIES AG



















Company locations

Austria

Head office
ATB AUSTRIA ANTRIEBSTECHNIK AG
Hohenstaufengasse 7,
1010 Vienna
Phone: +43 1 90250-0
Fax: +43 1 90250-110
E-Mail: info@atb-motors.com
Http://**www.atb-motors.com**

ATB MOTORENWERKE GmbH
G.-Bauknecht-Straße 1,
A-8724 Spielberg
Phone: +43 3577 757-0
Fax: +43 3577 757-182
E-Mail: info@at.atb-motors.com

ATB TECHNOLOGIES GmbH
Millennium Park 11,
A-6890 Lustenau
Phone: +43 5577 9010 - 0
Fax: +43 5577 9010 - 110
E-Mail: info@at.atb-motors.com

Germany

ATB ANTRIEBSTECHNIK GmbH
Silcherstraße 74,
D-73642 Welzheim
Phone: +49 7182 14 - 1
Fax: +49 7182 14 - 590
E-Mail: info@de.atb-motors.com

ATB MOTORENTECHNIK GmbH
Helgoländer Damm 75,
D-26954 Nordenham
Phone: +49 4731 365 0
Fax: +49 4731 365 159
E-Mail: nordenham@de.atb-motors.com

France
ATB SELNI SAS
6 rue Louise Michel BP 24,
F-58028 Nevers Cedex
Phone: +33 3 86 93 42 00
Fax: +33 3 86 93 42 22
E-Mail: info@fr.atb-motors.com

Great Britain

ATB MORLEY Ltd.
Bradford Road, West Yorkshire,
LS28 6QA Leeds
Phone: +44 113 257 1734
Fax: +44 113 257 0751
E-Mail: sales@uk.atb-motors.com

ATB LAURENCE SCOTT LTD.
PO Box 25 Hardy Road,
NR1 1JD Norwich, Norfolk
Phone: +44 1603 628 333
Fax: +44 1603 619 788
E-Mail: admin@laurence-scott.com

Serbia

ATB SEVER a.d.
Magnetna polja 6,
24000 Subotica
Phone: +381 24 665 100, 665 200
Fax: +381 24 665 105
E-Mail: sever@rs.atb-motors.com

Czech Republic

ATB COMPONENTS S.R.O.
Lihovarská 1335/9,
CZ-71610 Ostrava - Radvanice
Phone: +420 5 962 333 40
Fax: +420 5 962 333 40
E-Mail: atb.bastro@quick.cz

ATB SEVER a.d.
Magnetna polja 6
24 000 Subotica
Serbia
Phone +381 24 665 124
Fax +381 24 665 125
www.atb-motors.com
sever@rs.atb-motors.com