Technical Documentation





Drip - Proof Electric Motors type OK and (2.)B(P)OK Drip-Proof 3-Phase Induction Marine Motors

ATB SEVER
Technology in Motion

(B)OK 05 EN

Vision



We set your ideas in motion. We do not merely manufacture motors, but instead turn the ambitious concepts of our customers into modern, innovative and reliable products, which are unique and point the way to the future. We bring our customers closer to their goals with reliability, creativity and flexibility.

Business Units



Serial Motors



New Businesses



Home Appliances

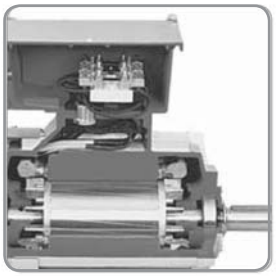

Project Motors

Index

Drip - Proof Electric Motors type OK I

(2.)B(P)OK Drip-Proof 3-Phase Induction Marine Motors II

Questionnaire III

Content

Certificates and Standards 3
Type Code and Mountings 4
OK
General
Voltage and frequency 5
Output 5
Speed. 5
Mechanical protection 5
Tolerances 5
Cooling 5
Winding insulation. 6
Terminal box. 6
Thermal protection 6
Bearing 7
Bearing seals 7
Relubrication and relubrication schedules 7
Nominal service life 7
Bearing eddy currents insulated bearings 7
Vibration level with free suspension 7
Operating noise levels 8
Lubrication. 8
Heaters 8
Surface protection. 8
Installation at high and low Temperatures
Use at low temperatures with and without heaters 9
Electrical Data for OK
Protection: IP 23; for 2p=2 and 2p=4; 400V; 50Hz 10
Protection: IP 23; for 2p=6 and 2p=8; 400V; 50Hz 11
Dimensions of the Motors
Protection: IP23; IM B3. 12
Protection: IP23; IM B5. 13
Protection: IP23; IM V1 14
Marine Motors
General 15
Description of OK, BOK, BPOK, 2.BOK and 2.BPOK standard 3-phase motors 16
Motors for sea-going ships and inland waterway crafts . 17
Mechanical protection 18
Table of power for motors special execution duty 380V, 50H 2p=4 and 2p=6; 440V, 60Hz 19
Electrical Data
for S1; 2p=4 and 2p=6; 380V; 50 Hz. 20
for S2, 30 min; 2p=4 and 2p=6;380V; 50Hz. 21
for S2, 60 min; 2p=4 and 2p=6; 380V; 50Hz. 22
for S2, 90 min; 2p=4 and 2p=6; 380V; 50Hz. 23
for S1; 2p=4 and 2p=6; 440V; 60 Hz. 24
for S2, 30 min; 2p=4 and 2p=6; 440V; 60Hz. 25
for S2, 60 min; 2p=4 and 2p=6; 440V; 60Hz. 26
for S2, 90 min; 2p=4 and 2p=6; 440V; 60Hz. 27
Dimensions of the Motors
Protection: IP23; IM V1- BOKT 28
Protection: IP23; IM V1- 2.BOKT 29
Questionnaire for the Offer of Asynchronous Electric Motors 30

Certificates and Standards

ATB SEVER a.d. Subotica apply the most stringent quality-control measures, which are checked annually by official government agencies. The certification of the quality assurance was implemented for the first time in 1995.

Today we have certification in accordance with:

– ISO 9001:2000 for the Quality Management System

In order to ensure the universal application of the motors within future global markets, conformity certificates have been issued for the motors through various domestic and foreign certification authorities

Ship classification authorities e.g.:

– Germanischer Lloyd

– Lloyd's Register

– Nippon Kaiji Kyokai

– American Bureau of Shipping

– Russian Maritime Register of Shipping



STANDARDS AND REGULATIONS

All motors correspond to the following international standards and specifications.

- IEC 60034-1 Rating and performance
- IEC 60034-2 Methods for determining loses and efficiency
- IEC 60034-5 Degree of mechanical protection
- IEC 60034-6 Methods of cooling
- IEC 60034-7 Mounting arrangements
- IEC 60034-8 Terminal markings
- IEC 60034-9 Noise limits
- IEC 60034-11 Built-in thermal protection
- IEC 60034-12 Starting performances
- IEC 60034-14 Mechanical vibrations, limit values
- IEC 60038 IEC standard voltage
- IEC 60072-1 Mounting dimensions
- IEC 60085 Insulation material classification
- IEC 60721 Suitability for climate groups

Type Code and Mountings

Type Code	(2)	(R)	B	(P)	0	K	T	(I)	XXX	YY	W1	E–2269
Position feature												
Welded housing Remarks: Motor without this number 2 has cast iron housing												
Execution for connection across the regulated frequency converter												
Marine use												
Increased power												
Drip proof IP 23												
Squirrel cage motor												
Thermal protection												
Special iron sheet												
Stator size												
Motor length code												
Poles number												
Special characteristic												

Mountings to DIN EN 60034 **Other construction types on request**

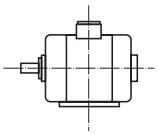

IEC Code I
IEC Code II
Explanation

IM B3
IM 1001
Foot mounting, feet at bottom

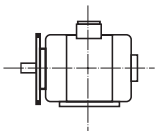

IM B35
IM 2001
Foot mounting, feet at bottom, with additional flange mounting, with access from housing side

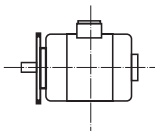

IM B5
IM 3001
Flange bearing plate on drive side, with access from housing side

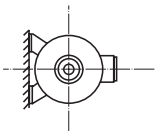

IM B6
IM 1051
Foot mounting, feet to the left side (viewed from drive side)

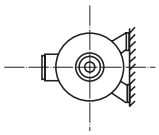

IM B7
IM 1061
Foot mounting, feet to the right side (viewed from drive side)

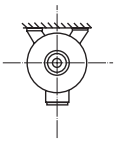

IEC Code I
IEC Code II
Explanation

IM B8
IM 1071
Foot mounting, feet above

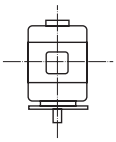

IM V1
IM 3011
Flange mounting on drive side of the flange, with access from housing side, drive side below

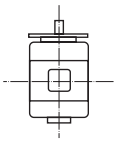

IM V3
IM 3031
Flange mounting on drive side of the flange, with access from housing side, drive side above

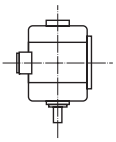

IM V5
IM 1011
Foot mounting, drive side below

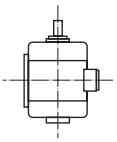

IM V6
IM 1031
Foot mounting, drive side above

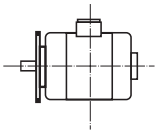

IEC Code I
IEC Code II
Explanation

IM B14
IM 3601
Flange mounting on drive side of the flange, no access from

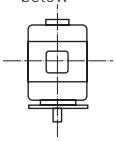

IM V18
IM 3611
Flange mounting on drive side of the flange, no access from side below

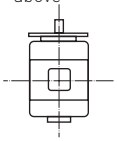

IM V19
IM 3631
Flange mounting on drive side of the flange, no access from side above

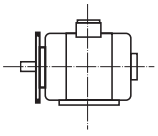

IM B34
IM 2101
Foot mounting, feet at bottom, with additional flange mounting on no access from housing side

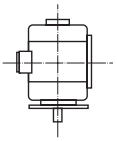

IM V15 / IM V35
IM 2011 / IM 2031
Foot mounting, with additional flange mounting on drive side of the flange, drive side below/above, access from housing side

Voltage and frequency

The motors are of standard design for rated supply voltage 3x400 V ±10%, 50Hz. For upper and lower limit voltage the allowed winding over temperature is larger by 10 K. Motors are connected in delta (D) connection. On special request motors can be manufactured for other voltages up to 690 V.

However, motors with a 50 Hz winding can be used with 60 Hz system but with appropriate variations in performance and electrical parameters.

Output

Rated motor outputs given in the performance data tables refers to continuous running duty (S1, ED 100%) at rated voltage, rated frequency and maximum ambient temperature of 40°C. For special operating condition (temperature above 40°C, altitude above 1000 m ASL, frequent starting, load torque starting, driving heavy flywheel masses etc.) are available on a special request.

Speed

Rotation speed given in the performance data tables refers to the rated load at rated voltage and frequency. According to IEC 60034-8 the internal connection of each machine to its own terminals is for clockwise direction of rotation from the drive side.

Mechanical protection

Protection of terminal box is IP55. OK type motors are produced as protected ones, protection grade is IP23 according to IEC standards 34-5. Power supplied parts and the inner rotating ones are protected against penetration of solid bodies larger than < P8 mm and against splash water from 30 above horizontal. Power supplied parts and the rotating ones are protected against intentional touch.

Tolerances

All mechanical dimensions of electrical motors are in accordance with the IEC 60072-1 which also indicates allowed tolerances.

The main mounting dimension tolerances are shown in the following table:

Measure		Tolerances
D, DA	≤ 28 mm	j6
	> 28 mm	k6
	> 50 mm	m6
N	≤ 450 mm	j6
	> 450 mm	h6
A, B	≤ 250 mm	± 0.75 mm
	> 250 mm	± 1.00 mm
	> 500 mm	± 1.50 mm
M	≤ 200 mm	± 0.25 mm
	> 200 mm	± 0.50 mm
	> 500 mm	± 1.00 mm
H	≤ 250 mm	- 0.50 mm
	> 250 mm	- 1.00 mm

Cooling

OK type motors are inner cooled motors in accordance with the standards IEC 60034-6, IC 01. They are provided with a fan that pulls the fresh air over the windings, heads and rotor and stator stacks, and exits the motor on the drive or non drive end, depending on the motor size. The ways through which the air passes are dimensioned to provide good cooling of the motor. The favorable construction of the fan with straight fins ensures sufficient amount of cooling air, regardless to the rotating direction.

6 Winding insulation, terminal box, thermal protection

Winding insulation

The motors are designed using class F insulation system. In case that the ambient temperature does not exceed 40°C, the maximal temperature rise is 105 K (according to the IEC 34-1). This over temperature limit refers to resistance variation measuring method 3. For other insulation systems it is necessary to consult the factory.

Terminal box

Standard location of the motor terminal box is on the right hand side, viewed from the drive-end side.

The terminal box is spacious, quadrangle and it can be turned when necessary, for 90° on 180°, and in this way can be adjusted to the coming cable. The terminal box is provided with two cable inlets.

JUS M.BO.090. On special request, motors can be delivered with terminal box provided with a cable entry head. In the terminal box there is a special screw for grounding. Motors OK 355 are provided with terminal box with cable entry head.

All the six terminals are led out into the terminal box and so the motor can be started, when operating allows, by star-delta switch.

Type	Terminal box	Maximum admissible current, A	No.of connecting screws	Connecting screws / material	Connection dimensions	Number of plugs	Max. Cable diameter, mm
OK 160	P40	100	6 or 12	M8	AU 36X27	1	38
OK 180							
OK 200							
OK 225	P50	200		M10		2	
OK 250							
OK 280	P60	400		M12	AU 42X42		43
OK 315							
OK 355	P70	600		M16	ϕ 70		70

Thermal protection

PTC thermistors, on special request the stator winding can be protected thermally by mounting thermistors. In each phase of winding there is a mounted thermistor for switching out units. Switching out unit can be delivered with motor.

The in-built thermistors are with positive thermal efficiency (PTC resistor). On special request there can be built in thermistors for signaling except for thermal protection.

Thermometers for bearings PT100: On customer's request we build in resistance platinum thermometers for measuring the bearing temperature. Use of these thermometers is suitable with permanent loading as bearing temperature is obtained by measuring resistance and in this way bearing damage can be established on time. Thermometer ends are connected to mutual plug. Instruments for temperature measuring and switch-off unit can be delivered with motor.

Motor parts	Frame size							
	160	180	200	225	250	280	315	355
Stator frame	Cast iron							
End shield B3	Cast iron							
Flange B5	Cast iron							
Feet	Cast on							
Fan	Al. alloy							

Bearings

Bearing, bearing seals, relubrication and relubrication schedules, nominal service life, bearing eddy currents, insulated bearings, vibration level with free suspension

Bearing

All motors are provided with high quality bearings made by SKF or FAG. OK type motors are made with ball bearings series 63 with increased gap C3. Bearings are selected so that with normal lubrication and depending on load, they can endure minimal 20,000 hours work, relatively 15,000 hours with two poles motors. Such bearing arrangement without descriptions enables mounting of motor in all positions described under the title: Construction and shape.

Bearing seals

The motors are fitted with external radial or axial seals. The seals prevent ingress of water along the shaft into the bearing housing. They have good abrasion resistance and thermal stability and are also resistant to mineral oils, saline solutions and diluted acids. Seals for media not listed above are available on request.

Relubrication and relubrication schedules

Motors above frame size 200 are equipped with relubrication devices with grease distributors.

Bearings with relubrication devices are packed with lithium saponified grease. The relubrication intervals are listed in the middle table on this page .

The relubrication must be implemented with the same grease type, i.e. grease with same saponification component and same consistence. ATB employs a lithium saponified anti-friction roller bearings. See also information plate on motor.

Other grease types are available on request.

Nominal service life

In pure coupling operation, the theoretical service life is more than 50,000 operating hours.

The max. admissible radial and axial loading is indicated and given on request.

Bearing eddy currents, insulated bearings

Through magnetic asymmetries on mains-powered motors a voltage can occur along the shaft. This shaft voltage leads to transients between rotor and stator which flow through the roller bearings. If the voltage exceeds a peak value of 500 mV, the bearings may get damaged. This danger exists primarily in case of larger shaft heights. This effect can be amplified through operation with frequency inverter. The implementation of the inverter has a decisive influence in this case. Pulse-controlled AC inverters generate particularly high-frequency voltages and currents, depending on the clock frequency and pulse modulation.

Output filters in the inverters minimize these effects. To avoid damaging the bearings, an insulated bearing is therefore always installed on the non-drive end for inverter operation with motors from frame size 315.

As well as this, the operator must provide for a large-area grounding of the motor housing, so that the currents circulating between inverter and stator can be diverted through this.

Vibration level with free suspension

v_{eff}, mm/s	Frame size	
	160-280	315,355
Level A	2.2	2.8
Level B	1.1	1.8

Type	Numb of poles	Horizontal shaft	Vertical shaft			Quantity of grease	Time of number of poles	
		D-end	No D-end	D-end	No D-end	(gr)	2	4, 6, 8
OK 160	2, 4, 6, 8	6310 C3	6310 C3	6310 C3	6310 C3	31	10,000	20,000
OK 180	2, 4, 6, 8	6312 C3	6312 C3	6312 C3	6312 C3	40	10,000	20,000
OK 200	2, 4, 6, 8	6313 C3	6313 C3	6313 C3	6313 C3	47	10,000	20,000
OK 225	2, 4, 6, 8	6314 C3	6314 C3	6314 C3	6314 C3	27	2,500	5,900
OK 250	2, 4, 6, 8	6316 C3	6316 C3	6316 C3	6316 C3	31	2,100	5,700
OK 280	2, 4, 6, 8	6317 C3	6317 C3	6317 C3	6317 C3	37	1,900	5,200
OK 315	2, 4, 6, 8	6319 C3	6319 C3	6319 C3	7319 B	45	1,700	5,200
OK 355	2	6319 C3	6319 C3	6319 C3	7319 B	45	1,700	
	4,6,8	6322 C3	6322 C3	6322 C3	7322 B	60		4,350

The fixing dimensions given in thick figures are obligatory according to the recommendations of IEC. All the other tehnical data and dimensions of the motors type OK may undergo some changes during the futher development of these motors and therefore they can be considered as obligatory after our confirmation only.

Operating Noise Levels

Operating noise levels

Noise measurements are performed in a silent room to EN ISO 3744.

The sound pressure level "Lp" and the sound power level "Lw" in dB(A) are indicated for the individual frame sizes in the operating data sheets.

Measured values according to EN ISO 3744 are involved. They apply for rated load at 50 Hz, plus a tolerance of +3 dB(A).

Pole		2			4			6			8		
Type		IEC 34-9	OK	OK	IEC 34-9	OK	OK	IEC 34-9	OK	OK	IEC 34-9	OK	OK
		Sound power LwA		Sound pressure Lpa	Sound power LwA		Sound pressure Lpa	Sound power LwA		Sound pressure Lpa	Sound power LwA		Sound pressure Lpa
160	M, L	96	87	76	91	78	67	85	77	66	-	-	-
180	M, L	99	89	78	91	80	69	88	77	66	-	-	-
180	L	99	89	78	94	80	69	88	77	66	-	-	-
200	M	101	90	79	94	84	72	88	78	67	-	-	-
200	L	101	90	79	97	84	72	91	78	67	-	-	-
225	M	103	90	79	97	86	74	91	78	67	-	-	-
250	S, M	103	90	79	100	87	75	94	79	68	-	-	-
280	S	105	90	79	100	87	75	97	79	68	-	-	-
280	M	105	90	79	103	96	75	97	79	68	-	-	-
315	S	105	95	83	103	96	84	97	88	76	-	-	-
315	M	105	95	83	103	96	84	100	88	76	-	-	-
315	L	107	97	85	106	96	84	100	88	76	-	-	-
355	M	107	102	90	106	102	90	103	94	82	99	92	80
355	L	109	102	90	108	102	90	103	94	82	99	92	80

Lubrication

All data in table refer to ambient temperature up to 40°C. The greases indicated in table are on the base of lithium.

BALANCING: All motors are balanced with full or half key. Motors balanced in this way provide vibration level N (standard as per DIN VDE 0530 section 14). Method of balancing is printed in the front of shaft or in the nameplate, and designations are the following:

F - balanced with full key,

H - balanced with half key.

Heaters

In case the motor is provided for long storage on if it is out of operation for long time, it is necessary to provide heating system which establishes higher internal motor temperature than ambient temperature in order to prevent appearing of condensed moisture, which is detrimental for winding insulation and which makes corrosion of interior of motor. It is recommended to switch on heater when ambient temperature is lower than +50°C or when the relative humidity of ambient air is higher than 80%. Heater connections are in the terminal box and they will be connected at rated voltage 220 V.

Surface protection

All motors are protected with base colour and protective alkyd color RAL 7001.

Installation at normal, high and low temperatures

Finish painting, use at low temperatures with and without heaters

The standard motors are suitable for installation outdoors, in humid and dusty atmospheres (industrial climate) at temperatures from –20 °C to +40 °C.

Special-purpose versions for an extended ambient temperature range from –55 °C to +60 °C are available. In these cases a corresponding construction designation is made on the test label.

Motors suitable for use at extremely low temperatures are designed in accordance with the table on the right.

The PTB conformity certificate for ATB motors with shaft heights 63 to 315 applies for minus temperatures to –55°C.

With temperatures lower than –20 °C, the motors are supplied in two versions, with or without anti-condensation heating. In case of implementations with anti-condensation heating, the heating must be used to prevent a drop of the motor temperature below –20 °C.

Finish painting

Standard finish painting of the motors is performed by protective alkyd paint (RAL 7001). For special climate conditions, according to IEC 60721-2-1, painting is performed by epoxy paint. Other painting is on special request.

Use at low temperatures with heaters

Component	–20 °C	–40 °C	–55 °C
Bearing	Normal	Normal	Normal
Bearing grease	Normal	Normal	Normal
Shaft seal	Normal	Normal	Special
Fan	Al-Fan	Al-Fan	Al-Fan or steel
Stator winding	Normal	Normal	Normal
Anti-condensation heater	No	Required	Required
Cast parts	EN-GJL-200	EN-GJL-200	EN-GJL-200
Shaft	C35	S355J2G3	S355J2G3
Item testing	Normal	Normal	Normal
Fastening screws	5.6	A2-70	A2-70
Eye bolts	Normal	Special	Special
Cable entry	Normal	Normal	Special
Paintwork	Normal	Normal	Special

Use at low temperatures without heaters

Use as with anti-condensation heating, however with the following deviations

Component	–20 °C	–40 °C	–55 °C
Bearing	Normal	Normal	Normal
Bearing grease	Normal	Normal	Normal
Shaft parts	S355J2G3	S355J2G3	S355J2G3
Item testing	Normal	Normal	Normal
Fastening screws	5.6	A2-70	A2-70

Electrical Data

10 Protection: IP 23; 2p=2 and 2p=4 400V; 50Hz

Type	P_N kW	n min^{-1}	η %	cos φ	I_N A	M_m Nm	I_p/I_N	M_p/M_N	M_m/M_N	RC	J kgm^2	Mass kg
n=3000min^{-1}												
OK 160 Mk-2	11	2870	84.0	0.85	22.8	37	4.9	2.2	2.5	16	0.025	100
OK 160 M-2	15	2890	87.0	0.86	29.0	50	5.8	2.3	2.6	16	0.033	110
OK 160 Lk-2	18.5	2900	88.0	0.87	35.0	61	6.3	2.7	2.7	16	0.044	135
OK 160 L-2	22	2915	90.0	0.87	40.6	72	6.5	2.8	2.8	16	0.052	145
OK 180 M-2	30	2915	87.5	0.86	57.5	98	5.5	2.3	2.8	13	0.080	163
OK 180 L-2	37	2925	89.0	0.87	69.0	121	6.2	2.3	2.7	13	0.103	185
OK 200 M-2	45	2930	90.0	0.86	84.0	146	6.2	2.7	3.0	13	0.154	250
OK 200 L-2	55	2940	91.0	0.87	100.0	178	8.5	3.4	3.5	13	0.193	275
OK 225 M-2	75	2946	91.0	0.89	134.0	243	6.8	2.1	3.0	13	0.300	350
OK 250 S-2	90	2935	91.0	0.87	164.0	293	5.5	2.3	2.5	13	0.471	450
OK 250 M-2	110	2935	91.0	0.87	201.0	358	5.2	2.3	2.5	13	0.565	500
OK 280 M-2	132	2957	92.5	0.89	231.0	426	7.3	2.2	3.1	13	0.846	620
OK 315 S-2	160	2955	93.0	0.89	279.0	517	7.3	2.1	3.0	10	1.309	800
OK 315 M-2	200	2961	92.5	0.86	363.0	645	6.7	2.2	3.0	10	1.636	890
OK 315 Md-2	250	2956	94.0	0.87	441.0	807	5.9	2.0	2.9	10	1.854	1010
OK 355 S-2	315	2972	94.0	0.88	550.0	1052	7.6	2.0	2.2	10	2.263	1300
OK 355 M-2	355	2972	94.3	0.88	618.0	1140	7.6	2.0	2.2	10	2.550	1430
OK 355 Md-2	400	2970	94.5	0.87	700.0	1290	7.7	1.9	2.2	10	2.874	1610
n=1500min^{-1}												
OK 160 M-4	11	1460	87.0	0.80	23.0	72	5.0	2.0	2.4	16	0.047	110
OK 160 Lk-4	15	1452	87.5	0.80	31.0	99	5.4	2.3	2.5	16	0.063	130
OK 160 L-4	18.5	1460	88.5	0.80	38.0	121	5.3	2.2	2.3	16	0.075	140
OK 180 M-4	22	1460	88.0	0.82	44.0	144	5.7	2.7	2.2	16	0.155	180
OK 180 L-4	30	1463	89.0	0.81	60.0	196	6.3	3.5	3.1	16	0.212	217
OK 200 M-4	37	1465	90.0	0.82	73.0	241	4.7	2.1	2.1	13	0.270	270
OK 200 L-4	45	1465	90.0	0.80	90.3	293	4.9	2.1	2.1	13	0.330	285
OK 225 M-4	55	1480	92.5	0.84	102.0	355	7.2	2.6	2.8	13	0.529	375
OK 250 S-4	75	1474	90.0	0.83	144.0	486	5.6	2.1	2.6	13	0.705	450
OK 250 M-4	90	1475	91.0	0.81	176.0	583	5.7	2.5	2.7	13	0.845	560
OK 280 S-4	110	1478	92.0	0.88	196.0	711	6.1	2.1	2.5	13	1.145	600
OK 280 M-4	132	1478	92.5	0.88	234.0	853	6.0	2.1	2.5	13	1.418	630
OK 315 S-4	160	1478	93.2	0.89	279.0	1034	6.4	2.0	2.7	10	1.940	838
OK 315 M-4	200	1478	93.1	0.88	350.0	1292	6.1	1.8	2.5	10	2.304	925
OK 315 Md-4	250	1480	93.7	0.89	433.0	1613	6.0	2.0	2.7	10	2.700	925
OK 355 S-4	315	1485	94.5	0.88	547.0	2025	5.4	1.8	2.5	10	4.334	1350
OK 355 M-4	355	1485	94.7	0.88	615.0	2283	5.4	1.8	2.4	10	5.345	1480
OK 355 Md-4	400	1486	94.9	0.87	700.0	2570	5.6	1.8	2.5	10	6.025	1660

Electrical Data

Protection: IP 23; 2p=6 and 2p=8

400V; 50Hz

Type	P_N kW	n min^{-1}	η %	cos φ	I_N A	M_m Nm	I_p/I_N	M_p/M_N	M_m/M_N	RC	J kgm^2	Mass kg
n=1000min^{-1}												
OK 160 M-6	7.5	955	84.0	0.81	15.9	75	5.3	2.0	2.7	13	0.069	110
OK 160 L-6	11	960	86.0	0.79	23.4	109	6.1	2.5	3.2	13	0.092	140
OK 180 M-6	15	970	87.0	0.79	31.5	148	5.1	1.7	2.5	13	0.155	180
OK 180 L-6	18.5	972	88.5	0.80	37.7	182	6.1	1.9	2.9	13	0.212	220
OK 200 M-6	22	982	87.5	0.82	44.5	214	5.6	1.8	2.6	13	0.423	280
OK 200 L-6	30	982	88.5	0.82	59.7	292	5.8	1.9	2.6	13	0.517	300
OK 225 M-6	37	977	90.0	0.80	74.0	361	4.4	1.9	2.3	13	0.793	390
OK 250 S-6	45	982	91.0	0.86	83.0	437	6.3	2.2	2.7	13	1.091	450
OK 250 M-6	55	985	91.5	0.88	99.0	533	6.3	2.1	2.3	13	1.309	560
OK 280 S-6	75	982	91.0	0.81	147.0	729	5.6	1.8	2.8	13	1.698	610
OK 280 M-6	90	984	92.0	0.81	174.0	873	6.3	1.9	2.9	13	2.102	650
OK 315 S-6	110	981	92.5	0.83	207.0	1070	5.6	2.4	2.6	13	3.470	900
OK 315 M-6	132	981	93.0	0.83	247.0	1285	5.5	2.4	2.6	13	4.164	1020
OK 355 Sk-6	160	985	93.5	0.85	290.0	1551	5.4	1.6	2.2	13	6.595	1250
OK 355 S-6	200	986	93.5	0.86	360.0	1937	5.1	1.7	2.2	13	7.914	1320
OK 355 M-6	250	989	94.0	0.86	446.0	2414	4.9	1.4	2.4	13	10.312	1450
OK 355 Md-6	315	987	94.0	0.89	544.0	3048	6.4	2.4	2.4	13	12.231	1630
n=750min^{-1}												
OK 160 Mk-8	4	710	79.0	0.70	10.4	54	4.0	1.7	2.4	10	0.052	110
OK 160 M-8	5.5	708	81.0	0.72	13.6	74	4.1	1.7	2.4	10	0.069	130
OK 160 L-8	7.5	710	82.0	0.72	18.4	101	4.2	1.8	2.4	10	0.092	150
OK 180 M-8	11	723	84.0	0.71	26.6	145	4.1	1.4	2.2	10	0.154	180
OK 180 L-8	15	722	87.0	0.69	36.0	198	4.4	1.6	2.4	10	0.215	200
OK 200 M-8	18.5	725	88.0	0.73	41.6	244	4.0	1.5	2.0	13	0.423	280
OK 200 L-8	22	725	88.0	0.73	49.5	290	4.0	1.5	2.1	13	0.518	290
OK 225 M-8	30	732	89.0	0.76	64.0	391	4.6	1.7	2.2	13	0.793	360
OK 250 S-8	37	732	90.0	0.75	79.0	483	4.9	1.9	2.3	13	1.091	470
OK 250 M-8	45	732	90.5	0.75	96.0	587	4.8	1.8	2.3	13	1.309	510
OK 280 S-8	55	733	90.5	0.76	115.0	717	4.6	1.5	2.1	13	1.698	600
OK 280 M-8	75	733	91.0	0.77	155.0	977	4.5	1.5	2.0	13	2.102	670
OK 315 S-8	90	736	92.0	0.79	178.0	1168	5.3	1.8	2.9	13	4.478	860
OK 315 M-8	110	736	93.5	0.80	212.0	1427	6.4	1.8	3.0	13	5.200	1000
OK 355 Sk-8	132	736	93.2	0.80	254.0	1712	4.9	1.6	2.2	13	8.279	1330
OK 355 S-8	160	742	93.7	0.77	321.0	2059	4.3	1.7	2.7	13	9.935	1400
OK 355 M-8	200	741	93.8	0.77	396.0	2577	4.4	1.8	2.2	13	11.866	1510
OK 355 Md-8	250	741	94.4	0.79	484.0	3222	4.7	2.4	2.6	13	14.074	1690

Dimensions of the Motors

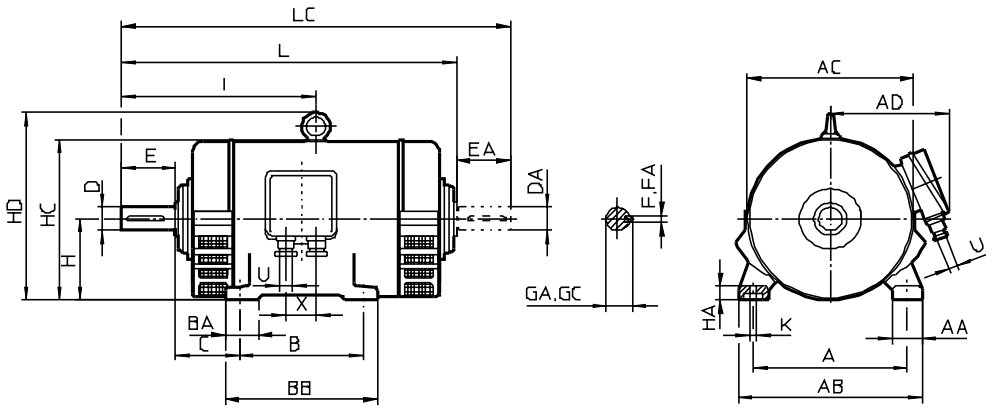

Type		Numb of poles	A	AA	AB	AC	AD	B	BA	BB	C	D	DA	E	EA	F	GA	H	HA	HC	HD	I	K	L	LC	U	X
OK 160	M;Mk	2;4;6;8	254	60	314	306	293	210	67	260	108	48	48	110	110	14	51.5	160	25	320	382	388	15	662	772	Au 36x27	70
	L;Lk							254		304												413.5		713	823		
OK 180	M	2;4;6;8	279	70	349	352	288	241	82	296	121	55	55	110	110	16	59	180	30	360	422	415	15	720	830	Au 36x27	70
	L							279		334												435		760	870		
OK 200	M	2;4;6;8	318	80	398	394	317	267	95	337	133	60	60	140	140	18	64	200	35	396	458	473.5	19	801	946	Au 36x27	70
	L							305		375												493.5		839	984		
OK 225	M	2	356	90	446	436	340	311	110	380	149	60	60	140	140	18	64	225	40	444	506	515	19	889	1029	Au 36x27	70
		4;6;8										65	65														
OK 250	S	2	406	110	446	482	362	311	120	392	168	65	65	140	140	18	69	250	40	492	563	532	24	922	1062	Au 36x27	70
		4;6;8										75	75			20	79.5										
	M	2	406	110	506	482	362	349	120	430	168	65	65	140	140	18	69	250	40	492	563	550	24	958	1098	Au 36x27	70
		4;6;8										75	75			20	79.5										
OK 280	S	4;6;8	457	110	567	542	424	368	135	450	190	80	80	170	170	22	85	280	45	554	644	598	24	1024	1196	Au 42x42	80
	M	2	457	110	567	542	424	419	135	500	190	65	65	140	140	18	69	280	45	554	644	590.5	24	1039	1181	Au 42x42	80
		4;6;8										80	80	170	170	22	85					620.5		1069	1241		
OK 315	S	2	508	125	633	604	462	406	150	500	216	70	70	140	140	20	74.5	315	50	620	710	608	28	1073	1215	Au 42x42	80
		4;6;8										90	90	170	170	25	95					638		1103	1275		
	M;Md	2	508	125	633	604	462	457	150	550	216	70	70	140	140	20	74.5	315	50	620	710	638	28	1133	1275	Au 42x42	80
		4;6;8										90	90	170	170	25	95					668		1163	1335		
OK 355	S;Sk	2	610	140	750	684	574	500	140	600	254	75	75	140	140	20	79.5	355	50	706	834	724	28	1305	1445	Double cable inlet	
		4;6;8										100	100	210	210	28	106					794		1375	1585		
	M;Md	2	610	140	750	684	574	560	140	660	254	75	75	140	140	20	79.5	355	50	706	834	754	28	1365	1505		
		4;6;8										100	100	210	210	28	106					824		1435	1645		

All dimensions in millimeters.

The fixing dimensions given in thick figures are obligatory according to the recommendations of IEC. All the other technical data and dimensions of the motors type OK may undergo some changes during the further development of these motors and therefore they can be considered as obligatory after our confirmation only.

Dimensions of the Motors

Protection: IP23 IM B5 13

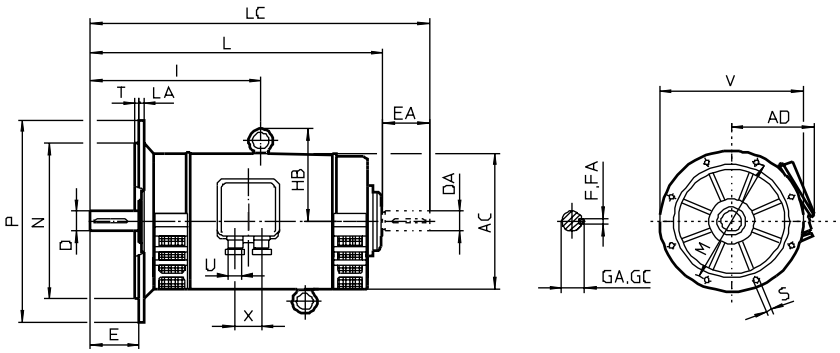

Type		Numb of poles	Flange designation	AC	AD	D	DA	E	EA	F / FA	GA / GC	HB	I	L	LA	LC	M	N	P	S	Num of holes	T	V	U	X
OK 160	M;Mk / L;Lk	2;4;6;8	F 300-I	306	293	48	48	110	110	14	51.5	221	388 / 413.5	662 / 713	13	772 / 823	300	250	350	18	8	5	468	Au 36x27	70
OK 180	M / L	2;4;6;8	F 400-I	352	288	55	55	110	110	16	59	242	415 / 435	720 / 760	22	830 / 870	400	350	450	19	8	5	513	Au 36x27	70
OK 200	M / L	2;4;6;8	F 500-I	394	317	60	60	140	140	18	64	262	473.5 / 493.5	801 / 839	22	946 / 984	500	450	550	19	8	5	592	Au 36x27	70
OK 225	M	2 / 4;6;8	F 500-I	436	340	60 / 65	60 / 65	140	140	18	64 / 69	287	515	889	22	1029	500	450	550	19	8	5	615	Au 36x27	70
OK 250	S	2 / 4;6;8	F 600-I	482	362	65 / 75	65 / 75	140	140	18 / 20	69 / 79.5	321	532	922	25	1062	600	550	660	24	8	6	692	Au 36x27	70
	M	2 / 4;6;8	F 600-I	482	362	65 / 75	65 / 75	140	140	18 / 20	69 / 79.5	321	550	958	25	1098	600	550	660	24	8	6	692	Au 36x27	70

All dimensions in millimeters.

The fixing dimensions given in thick figures are obligatory according to the recommendations of IEC. All the other technical data and dimensions of the motors type OK may undergo some changes during the further development of these motors and therefore they can be considered as obligatory after our confirmation only.

Dimensions of the Motors

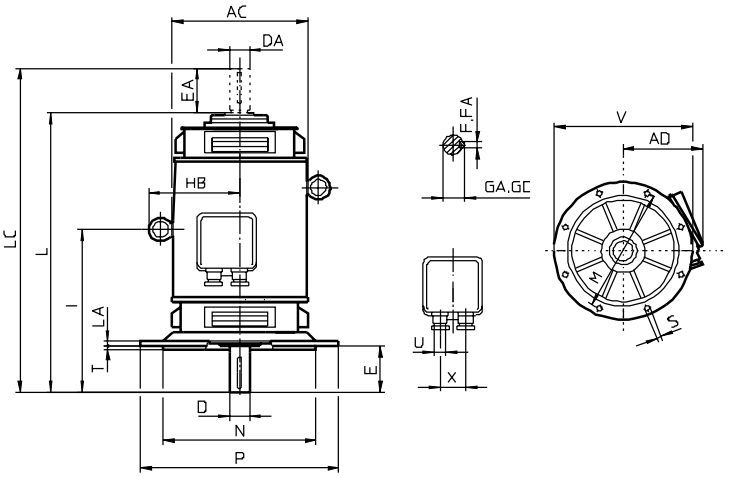

Type		Numb of poles	Flange design ation	AC	AD	D	DA	E	EA	F / FA	GA / GC	HB	I	L	LA	LC	M	N	P	S	Num of holes	T	V	U	X
OK 160	M;Mk	2;4;6;8	F 300-I	306	293	48	48	110	110	14	51.5	221	388	662	13	772	300	250	350	18	8	5	468	Au 36x27	70
	L;Lk												413.5	713		823									
OK 180	M	2;4;6;8	F 400-I	352	288	55	55	110	110	16	59	242	415	720	22	830	400	350	450	19	8	5	513	Au 36x27	70
	L												435	760		870									
OK 200	M	2;4;6;8	F 500-I	394	317	60	60	140	140	18	64	262	473.5	801	22	946	500	450	550	19	8	5	592	Au 36x27	70
	L												493.5	839		984									
OK 225	M	2	F 500-I	436	340	60	60	140	140	18	64	287	515	889	22	1029	500	450	550	19	8	5	615	Au 36x27	70
		4;6;8				65	65				69														
OK 250	S	2	F 600-I	482	362	65	65	140	140	18	69	321	532	922	25	1062	600	550	660	24	8	6	692	Au 36x27	70
		4;6;8				75	75			20	79.5														
	M	2	F 600-I	482	362	65	65	140	140	18	69	321	550	958	25	1098	600	550	660	24	8	6	692	Au 36x27	70
		4;6;8				75	75			20	79.5														
OK 280	S	4;6;8	F 600-I	542	424	80	80	170	170	22	85	364	598	1024	25	1196	600	550	660	24	8	6	754	Au 42x42	80
	M	2	F 600-I	542	424	65	65	140	140	18	69	364	590.5	1039	25	1181	600	550	660	24	8	6	754	Au 42x42	80
		4;6;8				80	80	170	170	22	85		620.5	1069		1241									
OK 315	S	2	F 600-I	604	462	70	70	140	140	20	74.5	395	608	1073	25	1215	740	680	800	24	8	6	862	Au 42x42	80
		4;6;8				90	90	170	170	25	95		638	1103		1275									
	M;Md	2	F 740-I	604	462	70	70	140	140	20	74.5	395	638	1133	25	1275	740	680	800	24	8	6	862	Au 42x42	80
		4;6;8				90	90	170	170	25	95		668	1163		1335									
OK 355	S;Sk	2	F 740-I	684	574	75	75	140	140	20	79.5	479	724	1305	25	1445	740	680	800	24	8	6	974	Double cable inlet	
		4;6;8				100	100	210	210	28	106		794	1375		1585									
	M;Md	2	F 740-I	684	574	75	75	140	140	20	79.5	479	754	1365	25	1505	740	680	800	24	8	6	974		
		4;6;8				100	100	210	210	28	106		824	1435		1645									

All dimensions in millimeters.

The fixing dimensions given in thick figures are obligatory according to the recommendations of IEC. All the other technical data and dimensions of the motors type OK may undergo some changes during the further development of these motors and therefore they can be considered as obligatory after our confirmation only.

GENERAL

- 3-phase drip-proof inductions motors BOK, BPOK, 2.BOK, 2.BPOK series.
- Power 18.5 to 780 kW.
- Frame size from 180 to 355 mm.
- Single speed: 4 and 6 pole, 380V - 50Hz and 440V - 60Hz.
- Higher power on request.

Cable gland positions

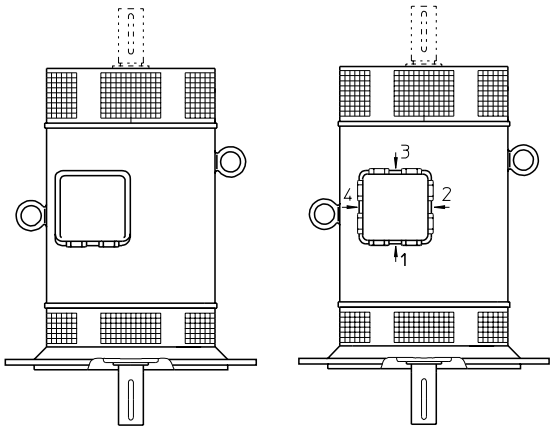

1:standard

(2.)	BOK	(T)	180	M	4P 1500min^{-1}	30 kW	IM 3011 (IM V1)	380 V	50 Hz	IP 23
Stator casing	Motor Type	Thermal protection	Frame size IEC 60072-1	Frame type	No. of poles Speed	Rated power	Mounting Position	Main voltage	Main Frequency	Degree of Protection IEC 60034-5

The table above is an example.

- It can be used to create the designation for the required product.
- Confirm the additional information below when placing an order:
  - Painting system
  - Driven machine
  - Above/below deck
  - Environment (relative humidity, temperature, ...)

Description of OK, BOK, BPOK, 2.BOK, 2.BPOK standard 3-phase motors

Component	Materials	Remarks
Frame	Cast iron or welded steel	- with integral feet, or without feet - gravity die casting for type OK, BOK, BPOK - in steel for type 2.BOK, 2.BPOK - 4 or 6 screw holes for foot mounting - lifting rings for frame sizes ≥180
Stator	Insulated low-carbon magnetic steel laminations Cathode copper	- low carbon content guarantees long-term lamination pack stability - welded packs - semi-enclosed slots - class F insulation
Rotor	Insulated low-carbon magnetic steel laminations Aluminum or copper	- inclined cage bars - rotor cage pressure die-cast in aluminum for frame size ≤ 315, soldered for frame size ≥ 355 - rotor cage shrink –fitted to shaft for frame size ≤315, keyed for frame size ≥355 - dynamically balanced rotor
Shaft	Steel	
End shields	Cast iron or steel	
Bearings and lubrication		for standard mounting: - ball bearings , C3 play - sealed and greased for life for - semi-protected or open types from frame size 180 M upwards - regreasable depending on the fame size - rear ball bearings preloaded
Labyrinth seals	Plastic or steel	- DE lip seal for all flange and face mounted motors
Lipseals	Synthetic rubber	- lip seal or labyrinth seal for foot mounted motors
Fan	Composite material aluminum alloy or steel	- bidirectional fan with 4 and 6 poles
Fan cover	Pressed steel	- on request, fitted with a drip cover for operation in vertical position, shaft facing upwards
Terminal box	Composite material aluminum alloy or steel	- IP 55 or IP 65 - fitted as standard with a terminal block with 6 or 12 steel terminals - 1 earth terminal in each terminal box
Screws and rods	Stainless steel	
Name plate	Stainless steel	- according to IEC standards and in compliance with MARINE specifications
Gland	Brass or composite material	- standard

Motors for sea-going ships and inland waterway crafts

The motors of the BOK, BPOK, 2.BOK(I), 2.BPOK-type are constructively adjusted and protected from environment so that they can be used for electromotors drives on ships and other vessels.

The motors are constructed so as to comply with following rules of registering shipping associations:

- Yugoslav Register of Shipping JRB
- Register of Russian Shipping RR
- Lloyd's Register of Shipping LR
- Bureau Veritas BV
- Germanisher Lloyd GL
- Det Norske Veritas NV
- Registro Italiano Navale RINa
- American Bureau of Shipping ABS

Output: Rated outputs of motors are listed in the schedules for environmental temperature of 40ºC, 45ºC and 50ºC. All the other values in the tables are valid for a power which corresponds to the environmental temperature of 40ºC. The outputs refer to the continuous running duty type S1. The efficiency and the power factor are practically the same, regardless of the environmental temperature, and the other values can be obtained by calculation in the power ratio, with the presumption that the speed remains unchanged. The calculated values are sufficiently correct for the practical selection.

The table bellow shows the permissible over-temperatures for the environmental temperatures required by shipping association for the unlimited radius of sailing (tropic areas). For sailing outside the tropic areas the environmental temperatures are lower by 5K. The overtemperatures are given for the insulation class F and method of measurement with increase o resistance.

Regulations:	Ambient temperature		
	40ºC	45ºC	50ºC
VDE	105ºC		
JRB		95ºC	
Register of Russian Shipping	110ºC	110ºC	
LLOYD'S Register of Shipping-LR		90ºC	
Bureau Veritas-BV			90ºC
Germanischer Lloyd-GL		95ºC	
Det Norske Veritas-NV		90ºC	
Register Italiano Navale Rina			95ºC
American Bureau of Shipping			90ºC

The motors for sea-going ships and inland waterway crafts meet the following standards:

- Frame size and dimensions IEC 60072-1
- Rating and performance IEC 60034-1
- Degrees of mechanical protection IEC 60034-5
- Methods of cooling IEC 60034-6
- Mounting arrangements IEC 60034-7 CODE II
- Terminal markings IEC 60034-8
- Noise limits IEC 60034-9

Compliance with 60034-1 means that many National Standards based on it are satisfied.

Voltage and frequency: The motors are designed for rated supply voltage of 3x380V, 50 Hz ; or

3x440V, 60 Hz. On a special request motors can be designed for other voltages.

Speed: In the schedules the speeds of the motors are given at rated frequency, rated voltage and rated load.

Mechanical protection

Degree of mechanical protection IP23 according to IEC standard 60034-5.

Dimensions of bearings are given in the table.

Type	Numb of poles	Vertical shaft		Quantity of grease	Time of Number of poles
		D-end	No D-end	gr	4, 6
BOK 180	4,6	6312 C3	6312 C3	40	20000
BOK 200	4,6	6313 C3	6313 C3	47	20000
BOK 225 2.BOK 225	4,6	6314 C3	6314 C3	27	5900/10500
BOK 250 2.BOK 250	4,6	6316 C3	6316 C3	31	5700/9750
BOK 280 BPOK 280 2.BPOK 280	4,6	6317 C3	7317 B	37	5500/8750
BPOK 315 2.BPOK 315	4,6	6319 C3	7319 B	45	5200/8200
2.BOKI 315	4,6	6322 C3	7322 B	60	4350/6300
BPOK 355 2.BPOK 355	4,6	6324 C3	7324 B	72	4200/5500

Converted motors: The motors are suitable for operation by electronic converters since the winding insulation of the motors endures certain voltage overloading. Generally, motors operated by converters have higher level of losses, vibrations and noise. So, during the motor operation performed from converter it is necessary to de-rate the motor, depending on speed range, torque-speed characteristics of the load, type of cooling and type of converter. Therefore when placing an order note than the motor will be operated by converter.

Terminal box: The terminal boxes are shown in the following table. In the terminal box there is a special grounding screw. Motor terminals are identified in accordance with IEC 60034-8.

Type	Terminal box	Maximum admissible current, A	No.of connecting screws	Connecting screws / material	Connection dimensions	Number of plugs	Max. Cable diameter, mm
BOK 180	P 5	100	6	M8/CuZn37	Pg 36	2	38
BOK 200							
BOK 225		200		M10/ECuF25			
2.BOK 225							
BOK 250	P 6						
2.BOK 250							
BOK 280	P 7	315		M12/ECuF25	Pg 42		43
BPOK 280							
2.BPOK 280		400		M16/ECuF25	Pg 48		56
BPOK 315		630		M20/ECuF25			
2.BPOK 315							
2.BOKI 315	P 8	800	12	M16/ECuF25			
BPOK 355							
2.BPOK 355		1260		M20/ECuF25	M 72x2		72

Thermal protection: On a special request stator winding of the motor can be protected from overheating by using PTC thermistors. In order to protect all the windings of the motor one PTC thermistor is embedded in each phase of the winding. The PTC thermistors are connected in series and two ends of such connection are led out in the terminal box. These two ends have to be connected to the control unit. Besides, the motors can be equipped with additional thermistors for alarm.

Heaters: As a protection against condensed water the motors can be equipped with heaters. During the motor stand still the heaters must be switched on. The power and supply voltage of the heating elements are shown in the following table:

Frame size H, [mm]	Supply voltage, [V]	Heater's power Pg, [W]
180-250		80
280-315	115 or 230	130
355		200

Labeling

Rating and test information is contained on a single plate attached to the housing. The plates are made of stainless steel (material 1.4300)

Table of Power
for Motors Special Execution Duty

380V, 50Hz

Type	P [kW] (S2 30min)	P [kW] (S1)	P [kW] (S2 60min)	P [kW] (S2 90min)
2p=4				
BOKT 180 M-4	40	30	37	35
BOKT 180 L-4	50	37	45	40
BOKT 200 M-4	55	40	50	45
BOKT 200 L-4	65	45	60	55
BOKT 225 M-4	75	55	65	60
BOKT 225 Md-4	85	65	75	70
BOKT 250 S-4	95	75	85	80
BOKT 250 M-4	112.5	80	100	90
BOKT 250 Md-4	125	90	110	100
2.BOKT 250 Lk-4	140	105	125	115
2.BOKT 250 L-4	150	110	132	125
BOKT 280 S-4	160	120	145	132
BOKT 280 M-4	200	150	180	160
2.BPOKT 280 M-4	230	170	200	185
2.BPOKT 280 Md-4	270	200	240	220
BPOKT 315 Sd-4	300	225	270	250
BPOKT 315 Md-4	350	250	315	285
2.BPOKT 315 Mx-4	420	315	375	340
2.BOKIT 315 Lk-4	485	355	425	400
2.BOKIT 315 L-4	525	380	450	425
BPOKT 355 M-4	535	400	475	450
2.BPOKT 355 Md-4	600	450	525	500
2.BPOKT 355 Lk-4	685	500	600	550
2.BPOKT 355 L-4	780	575	690	635
2p=6				
BOKT 180 M-6	25	18.5	22	20
BOKT 180 L-6	30	22	27	24
BOKT 200 M-6	35	25	30	28
BOKT 200 L-6	45	30	40	35
BOKT 225 M-6	50	37	45	40
BOKT 225 Md-6	60	45	55	50
2.BOKT 225 L-6	70	55	65	60
BOKT 250 S-6	80	60	70	65
BOKT 250 M-6	90	65	80	75
BOKT 250 Md-6	100	75	90	80
2.BOKT 250 Lk-6	110	80	95	85
2.BOKT 250 L-6	132	95	120	110
BPOKT 280 M-6	160	120	140	130
2.BPOKT 280 Lk-6	200	150	175	165
2.BPOKT 280 L-6	225	170	200	185
2.BPOKT 315 Sd-6	250	185	225	205
2.BPOKT 315 Md-6	280	200	250	225
2.BPOKT 315 Mx-6	315	225	280	255
2.BPOKT 315 Lk-6	350	250	315	285
2.BPOKT 315 L-6	400	300	355	325
BPOKT 355 Md-6	440	325	400	355
2.BPOKT 355 Mx-6	500	375	450	400
2.BPOKT 355 Lk-6	550	400	485	450
2.BPOKT 355 L-6	600	450	525	480

440V, 60Hz

Type	P [kW] (S2 30min)	P [kW] (S1)	P [kW] (S2 60min)	P [kW] (S2 90min)
2p=4				
BOKT 180 M-4	46	35	42	37
BOKT 180 L-4	60	45	55	50
BOKT 200 M-4	65	50	60	55
BOKT 200 L-4	75	55	65	60
BOKT 225 M-4	90	65	80	70
BOKT 225 Md-4	100	75	90	80
BOKT 250 S-4	110	85	100	95
BOKT 250 M-4	130	95	115	105
BOKT 250 Md-4	145	105	125	115
2.BOKT 250 Lk-4	165	120	145	132
2.BOKT 250 L-4	175	132	155	145
BOKT 280 S-4	185	140	165	155
BOKT 280 M-4	235	175	210	195
2.BPOKT 280 M-4	265	195	235	215
2.BPOKT 280 Md-4	315	230	275	255
BPOKT 315 Sd-4	350	260	310	285
BPOKT 315 Md-4	400	290	350	320
2.BPOKT 315 Mx-4	485	360	430	395
2.BOKIT 315 Lk-4	565	420	500	460
2.BOKIT 315 L-4	610	450	540	500
BPOKT 355 M-4	630	470	565	520
2.BPOKT 355 Md-4	700	520	625	570
2.BPOKT 355 Lk-4	800	590	710	650
2.BPOKT 355 L-4	900	660	790	730
2p=6				
BOKT 180 M-6	30	22	26	24
BOKT 180 L-6	35	25	30	27
BOKT 200 M-6	40	30	35	35
BOKT 200 L-6	50	37	45	40
BOKT 225 M-6	60	45	55	50
BOKT 225 Md-6	70	55	65	60
2.BOKT 225 L-6	80	60	70	65
BOKT 250 S-6	95	70	85	75
BOKT 250 M-6	105	75	90	80
BOKT 250 Md-6	120	90	110	100
2.BOKT 250 Lk-6	132	100	120	110
2.BOKT 250 L-6	160	120	145	130
BPOKT 280 M-6	190	140	170	155
2.BPOKT 280 Lk-6	240	175	210	190
2.BPOKT 280 L-6	270	200	240	220
2.BPOKT 315 Sd-6	290	215	260	235
2.BPOKT 315 Md-6	330	245	295	270
2.BPOKT 315 Mx-6	370	275	330	300
2.BPOKT 315 Lk-6	410	300	360	325
2.BPOKT 315 L-6	470	350	420	385
BPOKT 355 Md-6	510	380	455	420
2.BPOKT 355 Mx-6	580	430	515	475
2.BPOKT 355 Lk-6	650	480	575	530
2.BPOKT 355 L-6	700	520	625	570

Electrical Data

for S1; 2p=4 and 2p=6; 380V; 50 Hz

Protection: IP 23 — S1; 380V; 50Hz — Mounting positions IM 3011 (IM V1)

Type	Rated power at 50 Hz	Rated speed	Efficiency	Power factor	Rated current	Nominal torque	Starting current /Rated current	Starting torque/ Rated torque	Max. torque/ Rated torque	Class of rotor	Apparent starting power	Moment of inertia	Weight
	P_N kW	N_N min^{-1}	η %	cos φ	I_N A	C_N Nm	I_D/I_N	M_D/M_N	M_M/M_N	RC	kVA_D	J kgm^2	IM V1 kg
n=1500min^{-1}													
BOKT 180 M-4	30	1454	90.1	0.82	62	197	6.0	2.8	2.2	10	242	0.21	205
BOKT 180 L-4	37	1451	90.5	0.87	71	244	5.5	2.3	1.9	10	259	0.26	242
BOKT 200 M-4	40	1469	91.3	0.84	79	260	6.0	2.2	2.2	10	315	0.33	305
BOKT 200 L-4	45	1470	91.5	0.83	90	292	6.3	2.4	2.3	10	373	0.38	335
BOKT 225 M-4	55	1476	92.1	0.86	106	356	6.5	2.0	2.4	10	454	0.54	375
BOKT 225 Md-4	65	1475	92.5	0.88	121	421	6.2	1.8	2.2	10	498	0.62	410
BOKT 250 S-4	75	1467	91.1	0.84	149	488	4.8	1.4	1.7	10	471	0.72	470
BOKT 250 M-4	80	1471	91.9	0.84	157	519	5.4	1.7	1.9	10	563	0.87	515
BOKT 250 Md-4	90	1475	92.6	0.83	178	583	6.5	2.2	2.3	10	760	1.02	545
2.BOKT 250 Lk-4	105	1473	92.6	0.86	200	681	5.7	1.8	2.0	10	757	1.17	590
2.BOKT 250 L-4	110	1474	93.2	0.86	209	713	6.0	1.8	2.0	10	817	1.32	635
BOKT 280 S-4	120	1471	93.2	0.91	214	779	6.4	1.8	2.2	10	904	1.35	655
BOKT 280 M-4	150	1470	93.0	0.91	269	974	6.0	1.7	2.1	10	1056	1.60	720
2.BPOKT 280 M-4	170	1474	93.4	0.91	304	1101	6.7	1.9	2.3	10	1345	1.93	790
2.BPOKT 280 Md-4	200	1473	93.6	0.92	353	1297	6.3	1.8	2.2	10	1468	2.40	865
BPOKT 315 Sd-4	225	1475	93.6	0.91	401	1457	6.4	1.8	2.3	10	1681	2.75	980
BPOKT 315 Md-4	250	1477	94.1	0.91	444	1616	7.0	2.0	2.6	10	2044	3.25	1120
2.BPOKT 315 Mx-4	315	1477	94.4	0.92	551	2037	6.7	1.8	2.4	10	2433	4.25	1250
2.BOKIT 315 Lk-4	355	1480	95.0	0.90	631	2291	5.7	1.4	1.9	10	2355	5.15	1375
2.BOKIT 315 L-4	380	1485	95.5	0.86	703	2444	7.5	2.0	2.6	10	3453	5.70	1445
BPOKT 355 M-4	400	1484	95.2	0.92	692	2574	6.9	1.7	2.4	10	3143	6.40	1850
2.BPOKT 355 Md-4	450	1486	95.5	0.92	776	2892	7.0	1.7	2.4	10	3555	7.50	1990
2.BPOKT 355 Lk-4	500	1485	95.7	0.91	870	3215	7.6	2.0	2.6	10	4358	8.20	2120
2.BPOKT 355 L-4	575	1482	95.8	0.87	1048	3705	5.8	2.1	2.1	10	4003	10.60	2260
n=1000min^{-1}													
BOKT 180 M-6	18.5	965	87.7	0.82	39	183	5.5	1.5	2.3	10	142	0.22	205
BOKT 180 L-6	22	968	88.4	0.81	47	217	6.1	1.8	2.7	10	188	0.28	242
BOKT 200 M-6	25	977	90.1	0.84	50	244	5.5	1.7	2.1	10	180	0.52	320
BOKT 200 L-6	30	979	90.6	0.82	61	293	6.0	2.0	2.4	10	242	0.62	355
BOKT 225 M-6	37	980	91.0	0.82	75	361	5.5	1.7	2.0	10	274	0.80	380
BOKT 225 Md-6	45	979	91.3	0.83	76	439	5.5	1.7	2.0	10	325	0.92	425
2.BOKT 225 L-6	55	979	91.5	0.83	76	537	5.4	1.7	1.9	10	391	1.10	505
BOKT 250 S-6	60	979	91.1	0.89	112	585	5.8	1.6	2.2	10	432	1.35	520
BOKT 250 M-6	65	980	91.5	0.88	123	633	6.0	1.7	2.2	10	486	1.47	580
BOKT 250 Md-6	75	977	91.3	0.90	139	733	5.4	1.5	2.0	10	494	1.62	615
2.BOKT 250 Lk-6	80	980	91.0	0.89	150	780	6.2	1.8	2.3	10	602	1.82	650
2.BOKT 250 L-6	95	982	92.6	0.86	181	924	6.8	2.1	2.6	10	808	2.16	720
BPOKT 280 M-6	120	981	92.4	0.83	238	1168	6.3	2.0	2.5	10	993	2.70	760
2.BPOKT 280 Lk-6	150	982	93.2	0.85	288	1459	6.4	1.8	2.5	10	1206	3.75	880
2.BPOKT 280 L-6	170	981	93.1	0.87	319	1655	5.9	1.6	2.3	10	1241	4.40	980
2.BPOKT 315 Sd-6	185	985	94.1	0.90	331	1794	6.6	1.5	2.5	10	1445	5.20	1090
2.BPOKT 315 Md-6	200	985	94.0	0.91	355	1939	6.7	1.5	2.5	10	1564	5.90	1200
2.BPOKT 315 Mx-6	225	986	94.5	0.89	406	2179	7.8	2.0	3.0	10	2081	6.50	1270
2.BPOKT 315 Lk-6	250	987	94.7	0.87	461	2419	8.6	2.3	3.4	10	2610	7.32	1360
2.BPOKT 315 L-6	300	986	94.7	0.89	539	2906	7.7	2.0	3.0	10	2732	8.27	1470
BPOKT 355 Md-6	325	985	94.7	0.91	573	3151	7.3	1.2	2.9	10	2751	11.50	1850
2.BPOKT 355 Mx-6	375	985	94.9	0.90	667	3636	7.9	1.5	3.1	10	3555	13.00	2000
2.BPOKT 355 Lk-6	400	987	95.2	0.87	734	3870	8.5	1.7	3.6	10	4087	14.80	2120
2.BPOKT 355 L-6	450	985	95.0	0.90	800	4363	7.8	1.5	3.1	10	4080	15.60	2220

Note:
When you order the motors please fill in the "Questions for Shipping Motors"!

Electrical Data

for S2, 30 min; 2p=4 and 2p=6; 380V; 50Hz

Protection: IP 23

S2, 30 min.; 380V; 50Hz

Mounting positions IM 3011 (IM V1)

Type	Rated power at 50 Hz	Rated speed	Efficiency	Power factor	Rated current	Nominal torque	Starting current /Rated current	Starting torque/ Rated torque	Max. torque /Rated torque	Class of rotor	Apparent starting power	Moment of inertia	Weight
	P_N	N_N	η	cos φ	I_N	C_N	I_D/I_N	M_D/M_N	M_M/M_N	RC	kVA_D	J	IM V1
	kW	min^{-1}	%		A	Nm						kgm^2	kg
n=1500min^{-1}													
BOKT 180 M-4	40	1440	88.2	0.84	82	265	5.0	2.4	1.9	10	265	0.21	205
BOKT 180 L-4	50	1442	89.4	0.85	100	331	5.0	2.4	1.8	10	328	0.26	242
BOKT 200 M-4	55	1460	90.4	0.84	110	360	4.9	1.9	1.8	10	351	0.33	305
BOKT 200 L-4	65	1462	90.4	0.84	130	425	5.0	1.9	1.8	10	423	0.38	335
BOKT 225 M-4	75	1470	91.4	0.86	145	487	5.6	1.8	2.0	10	526	0.54	375
BOKT 225 Md-4	85	1470	92.4	0.87	160	552	5.6	1.8	2.0	10	586	0.62	410
BOKT 250 S-4	95	1464	90.4	0.84	190	620	4.3	1.4	1.6	10	541	0.72	470
BOKT 250 M-4	112.5	1466	91.5	0.85	220	733	4.6	1.5	1.6	10	665	0.87	515
BOKT 250 Md-4	125	1470	92.3	0.84	245	812	5.2	1.8	1.9	10	841	1.02	545
2.BOKT 250 Lk-4	140	1470	92.7	0.85	270	910	5.3	1.8	1.9	10	946	1.17	590
2.BOKT 250 L-4	150	1472	92.5	0.85	290	973	5.6	1.9	2.0	10	1066	1.32	635
BOKT 280 S-4	160	1470	92.6	0.89	295	1039	5.9	1.9	2.1	10	1144	1.35	655
BOKT 280 M-4	200	1470	92.5	0.90	365	1299	5.9	1.9	2.1	10	1407	1.60	720
2.BPOKT 280 M-4	230	1471	93.6	0.90	415	1493	5.8	1.8	2.1	10	1601	1.93	790
2.BPOKT 280 Md-4	270	1470	92.9	0.91	485	1754	5.7	1.7	2.0	10	1794	2.40	865
BPOKT 315 Sd-4	300	1472	92.9	0.90	545	1946	5.7	1.7	2.1	10	2036	2.75	980
BPOKT 315 Md-4	350	1475	93.8	0.90	630	2266	6.2	1.9	2.3	10	2577	3.25	1120
2.BPOKT 315 Mx-4	420	1475	94.5	0.90	750	2719	5.6	2.0	2.4	10	3232	4.25	1250
2.BOKIT 315 Lk-4	485	1477	94.6	0.88	885	3136	5.4	1.5	1.9	10	3136	5.15	1375
2.BOKIT 315 L-4	525	1478	95.0	0.87	965	3392	6.1	1.9	2.1	10	3863	5.70	1445
BPOKT 355 M-4	535	1481	94.6	0.90	955	3450	5.3	1.4	1.9	10	3324	6.40	1850
2.BPOKT 355 Md-4	600	1483	95.0	0.91	1055	3864	5.9	1.4	2.2	10	4039	7.50	1990
2.BPOKT 355 Lk-4	685	1481	95.3	0.91	1200	4417	6.2	1.7	2.2	10	4906	8.20	2120
2.BPOKT 355 L-4	780	1477	95.1	0.87	1432	5043	4.5	1.7	1.7	10	4234	10.60	2260
n=1000min^{-1}													
BOKT 180 M-6	25	955	84.2	0.82	55	250	4.4	1.3	1.9	10	156	0.22	205
BOKT 180 L-6	30	958	86.9	0.82	64	299	5.0	1.6	2.1	10	211	0.28	242
BOKT 200 M-6	35	970	87.9	0.84	72	345	4.3	1.3	1.7	10	201	0.52	320
BOKT 200 L-6	45	971	87.8	0.82	95	443	4.5	1.5	1.7	10	276	0.62	355
BOKT 225 M-6	50	973	89.3	0.81	105	491	4.7	1.5	1.7	10	317	0.80	380
BOKT 225 Md-6	60	973	90.0	0.81	125	589	4.7	1.6	1.7	10	385	0.92	425
2.BOKT 225 L-6	70	975	91.2	0.81	144	686	5.1	1.7	1.8	10	478	1.10	505
BOKT 250 S-6	80	973	90.1	0.87	155	785	4.8	1.3	1.8	10	489	1.35	520
BOKT 250 M-6	90	973	89.8	0.87	175	883	4.6	1.4	1.7	10	529	1.47	580
BOKT 250 Md-6	100	972	89.8	0.89	190	983	4.6	1.3	1.7	10	571	1.62	615
2.BOKT 250 Lk-6	110	972	91.2	0.88	208	1081	4.8	1.4	1.7	10	656	1.82	650
2.BOKT 250 L-6	132	975	91.2	0.88	250	1293	5.4	1.6	2.0	10	883	2.16	720
BPOKT 280 M-6	160	975	91.7	0.85	312	1567	5.3	1.6	2.0	10	1076	2.70	760
2.BPOKT 280 Lk-6	200	975	92.5	0.86	381	1959	5.2	1.6	2.0	10	1307	3.75	880
2.BPOKT 280 L-6	225	976	92.5	0.88	420	2202	4.8	1.3	1.8	10	1333	4.40	980
2.BPOKT 315 Sd-6	250	977	92.8	0.89	460	2444	5.4	1.3	2.1	10	1620	5.20	1090
2.BPOKT 315 Md-6	280	978	92.7	0.90	510	2734	5.6	1.3	2.1	10	1861	5.90	1200
2.BPOKT 315 Mx-6	315	978	94.3	0.89	570	3076	6.4	1.6	2.4	10	2414	6.50	1270
2.BPOKT 315 Lk-6	350	982	94.2	0.89	634	3404	6.7	1.8	2.5	10	2794	7.32	1360
2.BPOKT 315 L-6	400	979	93.5	0.89	730	3902	6.4	1.7	2.3	10	3060	8.27	1470
BPOKT 355 Md-6	440	981	93.6	0.91	785	4283	5.8	1.1	2.3	10	2967	11.50	1850
2.BPOKT 355 Mx-6	500	982	94.0	0.90	898	4863	6.4	1.2	2.5	10	3735	13.00	2000
2.BPOKT 355 Lk-6	550	984	94.4	0.90	984	5343	6.8	1.3	2.7	10	4384	14.80	2120
2.BPOKT 355 L-6	600	982	94.2	0.90	1075	5835	6.3	2.5	2.5	10	4396	15.60	2220

Electrical Data

Protection: IP 23

S2, 60 min.; 380V; 50Hz

Mounting positions IM 3011 (IM V1)

Type	Rated power at 50 Hz	Rated speed	Effici-ency	Power factor	Rated current	Nominal torque	Starting current /Rated current	Starting torque/ Rated torque	Max. torque /Rated torque	Class of rotor	Apparent starting power	Moment of inertia	Weight
	P_N	N_N	η	$\cos \varphi$	I_N	C_N	I_D/I_N	M_D/M_N	M_M/M_N	RC	kVA_D	J	IM V1
	kW	min^{-1}	%		A	Nm						kgm^2	kg
n=1500min^{-1}													
BOKT 180 M-4	37	1447	89.0	0.82	77	244	5.3	2.5	2.0	10	265	0.21	205
BOKT 180 L-4	45	1450	90.4	0.84	90	296	5.5	2.6	2.0	10	328	0.26	242
BOKT 200 M-4	50	1464	90.5	0.84	100	326	5.3	2.0	1.9	10	351	0.33	305
BOKT 200 L-4	60	1464	91.2	0.83	120	391	5.3	2.0	1.9	10	423	0.38	335
BOKT 225 M-4	65	1475	92.3	0.84	127	421	6.3	2.1	2.3	10	526	0.54	375
BOKT 225 Md-4	75	1475	92.3	0.85	145	486	6.1	2.0	2.2	10	586	0.62	410
BOKT 250 S-4	85	1466	90.5	0.84	170	554	4.8	1.5	1.7	10	541	0.72	470
BOKT 250 M-4	100	1468	91.5	0.84	198	651	5.1	1.7	1.8	10	665	0.87	515
BOKT 250 Md-4	110	1472	92.2	0.83	218	714	5.9	2.0	2.1	10	841	1.02	545
2.BOKT 250 Lk-4	125	1472	92.3	0.84	245	811	5.9	2.0	2.1	10	946	1.17	590
2.BOKT 250 L-4	132	1474	93.2	0.84	256	855	6.3	2.2	2.2	10	1066	1.32	635
BOKT 280 S-4	145	1472	92.4	0.89	268	941	6.5	2.1	2.3	10	1144	1.35	655
BOKT 280 M-4	180	1472	92.9	0.90	327	1168	6.5	2.1	2.3	10	1407	1.60	720
2.BPOKT 280 M-4	200	1474	93.3	0.90	362	1296	6.7	2.1	2.3	10	1601	1.93	790
2.BPOKT 280 Md-4	240	1473	93.2	0.91	430	1556	6.3	2.0	2.2	10	1794	2.40	865
BPOKT 315 Sd-4	270	1474	93.7	0.89	492	1749	6.3	1.9	2.4	10	2038	2.75	980
BPOKT 315 Md-4	315	1476	94.2	0.89	571	2039	6.9	2.2	2.5	10	2577	3.25	1120
2.BPOKT 315 Mx-4	375	1478	94.6	0.90	669	2423	7.4	2.2	2.7	10	3232	4.25	1250
2.BOKIT 315 Lk-4	425	1481	95.4	0.87	778	2741	6.1	1.7	2.1	10	3136	5.15	1375
2.BOKIT 315 L-4	450	1483	95.4	0.86	833	2898	7.1	2.1	2.5	10	3863	5.70	1445
BPOKT 355 M-4	475	1482	95.2	0.91	833	3061	6.1	1.5	2.1	10	3324	6.40	1850
2.BPOKT 355 Md-4	525	1485	95.5	0.91	918	3376	6.7	1.6	2.3	10	1039	7.50	1990
2.BPOKT 355 Lk-4	600	1484	95.5	0.91	1049	3861	6.9	1.9	2.5	10	4709	8.20	2120
2.BPOKT 355 L-4	690	1480	95.6	0.87	1260	4452	5.1	1.8	1.8	10	4234	10.60	2260
n=1000min^{-1}													
BOKT 180 M-6	22	960	86.0	0.81	48	219	5.0	1.4	2.1	10	156	0.22	205
BOKT 180 L-6	27	962	87.3	0.81	58	268	5.6	1.7	2.4	10	211	0.28	242
BOKT 200 M-6	30	973	88.6	0.83	62	294	5.0	1.6	2.0	10	201	0.52	320
BOKT 200 L-6	40	973	90.3	0.82	82	293	5.1	1.7	2.0	10	276	0.62	355
BOKT 225 M-6	45	976	90.6	0.82	92	440	5.3	1.7	1.9	10	317	0.80	380
BOKT 225 Md-6	55	976	91.3	0.81	113	538	5.2	1.7	1.9	10	385	0.92	425
2.BOKT 225 L-6	65	977	91.0	0.81	134	635	5.5	1.9	2.0	10	478	1.10	505
BOKT 250 S-6	70	976	90.0	0.87	136	683	5.5	1.6	2.1	10	489	1.35	520
BOKT 250 M-6	80	975	91.0	0.89	150	784	5.4	1.5	2.0	10	529	1.47	580
BOKT 250 Md-6	90	974	90.9	0.89	169	882	5.1	1.5	1.9	10	571	1.62	615
2.BOKT 250 Lk-6	95	977	91.1	0.89	178	929	5.6	1.7	2.0	10	656	1.82	650
2.BOKT 250 L-6	120	977	91.7	0.88	224	1173	6.0	1.8	2.0	10	883	2.16	720
BPOKT 280 M-6	140	978	92.2	0.83	277	1367	5.9	1.8	2.3	10	1076	2.70	760
2.BPOKT 280 Lk-6	175	979	92.8	0.85	337	1707	5.9	1.8	2.2	10	1307	3.75	880
2.BPOKT 280 L-6	200	978	93.1	0.87	377	1953	5.4	1.5	2.0	10	1333	4.40	980
2.BPOKT 315 Sd-6	225	982	93.8	0.90	405	2188	6.1	1.5	2.3	10	1620	5.20	1090
2.BPOKT 315 Md-6	250	982	93.8	0.90	450	2431	6.3	1.5	2.3	10	1861	5.90	1200
2.BPOKT 315 Mx-6	280	982	94.4	0.88	512	2723	7.2	1.7	2.6	10	2414	6.50	1270
2.BPOKT 315 Lk-6	315	984	94.3	0.89	570	3057	7.5	2.0	2.8	10	2794	7.32	1360
2.BPOKT 315 L-6	355	983	94.7	0.89	640	3449	7.3	2.0	2.7	10	3060	8.27	1470
BPOKT 355 Md-6	400	984	94.3	0.90	716	3882	6.3	1.1	2.5	10	2967	11.50	1850
2.BPOKT 355 Mx-6	450	984	94.6	0.89	812	4367	7.0	1.3	2.8	10	3735	13.00	2000
2.BPOKT 355 Lk-6	485	985	94.9	0.89	872	4702	7.7	1.5	3.1	10	4384	14.80	2120
2.BPOKT 355 L-6	525	984	94.9	0.90	934	5095	7.2	1.4	2.8	10	4396	15.60	2220

Electrical Data

Protection: IP 23 — S2, 90 min.; 380V; 50Hz — Mounting positions IM 3011 (IM V1)

Type	Rated power at 50 Hz	Rated speed	Efficiency	Power factor	Rated current	Nominal torque	Starting current /Rated current	Starting torque/ Rated torque	Max. torque /Rated torque	Class of rotor	Apparent starting power	Moment of inertia	Weight
	P_N	N_N	η	cos φ	I_N	C_N	I_D/I_N	M_D/M_N	M_M/M_N	RC	kVA_D	J	IM V1
	kW	min^{-1}	%		A	Nm						kgm^2	kg
n=1500min^{-1}													
BOKT 180 M-4	35	1446	89.0	0.83	72	231	5.1	2.4	1.9	10	242	0.21	205
BOKT 180 L-4	40	1447	89.6	0.87	78	264	5.1	2.1	1.7	10	259	0.26	242
BOKT 200 M-4	45	1465	90.4	0.85	89	293	5.4	2.0	1.9	10	315	0.33	305
BOKT 200 L-4	55	1463	91.2	0.85	108	359	5.3	1.9	1.8	10	373	0.38	335
BOKT 225 M-4	60	1474	92.2	0.86	115	389	6.0	1.8	2.1	10	454	0.54	375
BOKT 225 Md-4	70	1473	92.0	0.87	133	454	5.7	1.7	2.0	10	498	0.62	410
BOKT 250 S-4	80	1464	90.5	0.85	158	522	4.5	1.3	1.5	10	471	0.72	470
BOKT 250 M-4	90	1467	91.7	0.85	175	586	4.9	1.5	1.7	10	563	0.87	515
BOKT 250 Md-4	100	1473	92.0	0.84	197	648	5.9	1.9	2.0	10	760	1.02	545
2.BOKT 250 Lk-4	115	1470	92.0	0.86	221	747	5.2	1.6	1.8	10	757	1.17	590
2.BOKT 250 L-4	125	1470	92.9	0.87	235	812	5.3	1.6	1.8	10	817	1.32	635
BOKT 280 S-4	132	1468	91.9	0.91	240	859	5.7	1.6	2.0	10	904	1.35	655
BOKT 280 M-4	160	1468	92.4	0.92	286	1041	5.7	1.6	1.9	10	1056	1.60	720
2.BPOKT 280 M-4	185	1472	92.8	0.91	333	1200	6.1	1.7	2.0	10	1345	1.93	790
2.BPOKT 280 Md-4	220	1471	93.2	0.92	390	1428	5.8	1.6	2.0	10	1468	2.40	865
BPOKT 315 Sd-4	250	1472	93.4	0.91	447	1622	5.7	1.6	2.1	10	1681	2.75	980
BPOKT 315 Md-4	285	1474	93.8	0.91	507	1847	6.1	1.8	2.2	10	2044	3.25	1120
2.BPOKT 315 Mx-4	340	1475	94.2	0.92	596	2201	6.2	1.7	2.1	10	2433	4.25	1250
2.BOKIT 315 Lk-4	400	1478	94.6	0.89	720	2585	5.0	1.2	1.7	10	2355	5.15	1375
2.BOKIT 315 L-4	425	1483	95.4	0.87	778	2737	6.8	1.8	2.3	10	3453	5.70	1445
BPOKT 355 M-4	450	1482	95.2	0.92	779	2900	6.1	1.5	2.1	10	3143	6.40	1850
2.BPOKT 355 Md-4	500	1484	95.6	0.92	862	3218	6.3	1.5	2.1	10	3555	7.50	1990
2.BPOKT 355 Lk-4	550	1484	95.7	0.91	960	3539	6.9	1.7	2.4	10	4358	8.20	2120
2.BPOKT 355 L-4	635	1481	95.8	0.88	1145	4095	5.3	1.9	1.9	10	4003	10.60	2260
n=1000min^{-1}													
BOKT 180 M-6	20	962	87.2	0.83	42	199	5.1	1.4	2.1	10	142	0.22	205
BOKT 180 L-6	24	964	88.0	0.82	51	238	5.7	1.7	2.4	10	188	0.28	242
BOKT 200 M-6	28	974	89.8	0.85	56	275	4.9	1.5	1.8	10	180	0.52	320
BOKT 200 L-6	35	975	90.3	0.84	70	343	5.2	1.7	2.0	10	242	0.62	355
BOKT 225 M-6	40	978	90.8	0.83	81	391	5.2	1.6	1.8	10	274	0.80	380
BOKT 225 Md-6	50	976	91.0	0.83	101	489	4.9	1.5	1.7	10	325	0.92	425
2.BOKT 225 L-6	60	977	91.4	0.84	119	586	5.0	1.5	1.8	10	390	1.10	505
BOKT 250 S-6	65	977	90.8	0.89	122	635	5.4	1.5	2.0	10	431	1.35	520
BOKT 250 M-6	75	976	90.8	0.89	141	734	5.3	1.5	1.9	10	485	1.47	580
BOKT 250 Md-6	80	976	91.0	0.89	150	783	5.0	1.4	1.8	10	494	1.62	615
2.BOKT 250 Lk-6	85	979	91.5	0.89	159	829	5.8	1.6	2.0	10	602	1.82	650
2.BOKT 250 L-6	110	979	92.1	0.88	206	1073	6.0	1.8	2.2	10	808	2.16	720
BPOKT 280 M-6	130	979	92.0	0.84	256	1268	5.9	1.8	2.3	10	993	2.70	760
2.BPOKT 280 Lk-6	165	980	92.9	0.86	314	1608	5.8	1.6	2.2	10	1206	3.75	880
2.BPOKT 280 L-6	185	979	92.9	0.87	348	1805	5.4	1.5	2.1	10	1241	4.40	980
2.BPOKT 315 Sd-6	205	983	93.8	0.90	369	1992	6.0	1.4	2.2	10	1445	5.20	1090
2.BPOKT 315 Md-6	225	983	93.7	0.91	401	2186	6.0	1.4	2.2	10	1564	5.90	1200
2.BPOKT 315 Mx-6	255	984	94.2	0.90	457	2475	7.0	1.7	2.6	10	2081	6.50	1270
2.BPOKT 315 Lk-6	285	986	94.5	0.89	515	2760	7.7	2.0	2.9	10	2610	7.32	1360
2.BPOKT 315 L-6	325	985	94.7	0.89	586	3151	7.1	1.7	2.7	10	2732	8.27	1470
BPOKT 355 Md-6	355	983	94.5	0.91	627	3449	6.7	1.1	2.7	10	2751	11.50	1850
2.BPOKT 355 Mx-6	400	985	94.8	0.90	712	3878	7.4	1.4	3.0	10	3455	13.00	2000
2.BPOKT 355 Lk-6	450	985	95.1	0.89	808	4363	7.7	1.7	3.2	10	4087	14.80	2120
2.BPOKT 355 L-6	480	985	95.0	0.90	853	4654	7.3	1.4	3.0	10	4080	15.60	2220

Electrical Data

for S1; 2p=4 and 2p=6; 440V; 60 Hz

Protection: IP 23 — S1; 440V; 60Hz — Mounting positions IM 3011 (IM V1)

Type	Rated power at 50 Hz	Rated speed	Effici-ency	Power factor	Rated current	Nominal torque	Starting current /Rated current	Starting torque/ Rated torque	Max. torque /Rated torque	Class of rotor	Apparent starting power	Moment of inertia	Weight
	P_N	N_N	η	$\cos \varphi$	I_N	C_N	I_D/I_N	M_D/M_N	M_M/M_N	RC	kVA_D	J	IM V1
	kW	min^{-1}	%		A	Nm						kgm^2	kg
n=1500min^{-1}													
BOKT 180 M-4	35	1754	91.5	0.84	60	191	6.2	2.6	2.1	10	283	0.21	205
BOKT 180 L-4	45	1748	91.6	0.87	74	246	5.2	2.0	1.7	10	296	0.26	242
BOKT 200 M-4	50	1766	92.5	0.85	83	270	5.7	1.8	2.0	10	364	0.33	305
BOKT 200 L-4	55	1769	92.9	0.85	91	297	6.2	2.0	2.1	10	432	0.38	335
BOKT 225 M-4	65	1763	92.6	0.86	107	352	5.6	2.2	2.0	10	456	0.54	375
BOKT 225 Md-4	75	1775	93.6	0.88	119	404	6.3	1.7	2.1	10	571	0.62	410
BOKT 250 S-4	85	1764	92.2	0.86	142	460	5.0	1.3	1.7	10	535	0.72	470
BOKT 250 M-4	95	1771	92.3	0.86	157	512	5.4	1.5	1.8	10	639	0.87	515
BOKT 250 Md-4	105	1776	93.2	0.85	174	565	6.5	2.0	2.2	10	863	1.02	545
2.BOKT 250 Lk-4	120	1773	93.3	0.87	194	646	5.9	1.6	2.0	10	859	1.17	590
2.BOKT 250 L-4	132	1773	93.9	0.87	212	711	5.8	1.6	2.0	10	926	1.32	635
BOKT 280 S-4	140	1771	93.0	0.91	217	755	6.3	1.6	2.2	10	1033	1.35	655
BOKT 280 M-4	175	1770	93.5	0.92	267	944	6.0	1.6	2.0	10	1206	1.60	720
2.BPOKT 280 M-4	195	1775	94.0	0.91	299	1049	6.7	1.8	2.3	10	1526	1.93	790
2.BPOKT 280 Md-4	230	1774	94.3	0.92	348	1238	6.3	1.6	2.1	10	1665	2.40	865
BPOKT 315 Sd-4	260	1775	94.4	0.91	397	1399	6.4	1.7	2.3	10	1944	2.75	980
BPOKT 315 Md-4	290	1777	94.6	0.91	442	1559	7.0	2.0	2.5	10	2366	3.25	1120
2.BPOKT 315 Mx-4	360	1778	94.9	0.92	541	1934	6.9	1.8	2.4	10	2821	4.25	1250
2.BOKIT 315 Lk-4	420	1780	95.4	0.90	642	2253	5.5	1.3	1.8	10	2689	5.15	1375
2.BOKIT 315 L-4	450	1785	95.7	0.87	709	2408	7.3	1.8	2.5	10	3925	5.70	1445
BPOKT 355 M-4	470	1784	95.5	0.92	702	2516	6.7	1.5	2.3	10	3566	6.40	1850
2.BPOKT 355 Md-4	520	1786	95.8	0.92	774	2781	6.9	1.5	2.3	10	4034	7.50	1990
2.BPOKT 355 Lk-4	590	1786	95.8	0.92	878	3155	7.4	1.7	2.5	10	4918	8.20	2120
2.BPOKT 355 L-4	660	1782	96.1	0.86	1048	3537	5.5	1.9	1.8	10	4345	10.60	2260
n=1000min^{-1}													
BOKT 180 M-6	22	1164	89.3	0.83	39	180	5.4	1.3	2.3	10	160	0.22	205
BOKT 180 L-6	25	1168	90.1	0.82	44	204	6.3	1.8	2.8	10	213	0.28	242
BOKT 200 M-6	30	1176	91.4	0.85	51	244	5.3	1.5	2.0	10	206	0.52	320
BOKT 200 L-6	37	1177	91.9	0.84	63	300	5.7	1.7	2.2	10	274	0.62	355
BOKT 225 M-6	45	1178	92.2	0.84	76	365	5.3	1.5	1.9	10	307	0.80	380
BOKT 225 Md-6	55	1177	92.5	0.84	93	446	5.1	1.4	1.8	10	364	0.92	425
2.BOKT 225 L-6	60	1179	92.9	0.84	101	486	5.7	1.6	2.0	10	436	1.10	505
BOKT 250 S-6	70	1178	92.0	0.89	112	567	5.8	1.5	2.1	10	493	1.35	520
BOKT 250 M-6	75	1179	92.1	0.89	120	608	6.1	1.6	2.2	10	553	1.47	580
BOKT 250 Md-6	90	1176	91.8	0.90	143	731	5.2	1.3	1.9	10	564	1.62	615
2.BOKT 250 Lk-6	100	1178	92.7	0.89	159	811	5.7	1.5	2.1	10	684	1.82	650
2.BOKT 250 L-6	120	1180	93.1	0.89	190	971	6.4	1.7	2.3	10	918	2.16	720
BPOKT 280 M-6	140	1181	93.1	0.84	235	1132	6.4	1.8	2.5	10	1134	2.70	760
2.BPOKT 280 Lk-6	175	1181	93.7	0.86	285	1415	6.4	1.7	2.4	10	1376	3.75	880
2.BPOKT 280 L-6	200	1180	93.7	0.87	322	1619	5.8	1.5	2.2	10	1420	4.40	980
2.BPOKT 315 Sd-6	215	1184	94.4	0.90	332	1734	6.5	1.4	2.5	10	1634	5.20	1090
2.BPOKT 315 Md-6	245	1183	94.5	0.91	374	1978	6.3	1.3	2.3	10	1778	5.90	1200
2.BPOKT 315 Mx-6	275	1185	94.8	0.90	423	2216	7.4	1.7	2.8	10	2360	6.50	1270
2.BPOKT 315 Lk-6	300	1187	94.9	0.89	466	2414	8.4	2.0	3.1	10	2947	7.32	1360
2.BPOKT 315 L-6	350	1186	95.0	0.90	537	2818	7.6	1.7	2.8	10	3080	8.27	1470
BPOKT 355 Md-6	380	1184	95.1	0.91	576	3065	7.1	1.2	2.8	10	3101	11.50	1850
2.BPOKT 355 Mx-6	430	1185	95.5	0.91	649	3465	7.9	1.4	3.1	10	3897	13.00	2000
2.BPOKT 355 Lk-6	480	1186	95.7	0.89	739	3865	8.2	1.4	3.3	10	4632	14.80	2120
2.BPOKT 355 L-6	520	1185	95.6	0.90	793	4191	7.7	1.4	3.1	10	4618	15.60	2220

Electrical Data

for S2, 30 min; 2p=4 and 2p=6; 440V; 60Hz

Protection: IP 23

S2, 30 min.; 440V; 60Hz

Mounting positions IM 3011 (IM V1)

Type	Rated power at 50 Hz	Rated speed	Efficiency	Power factor	Rated current	Nominal torque	Starting current /Rated current	Starting torque/ Rated torque	Max. torque /Rated torque	Class of rotor	Apparent starting power	Moment of inertia	Weight
	P_N	N_N	η	cos φ	I_N	C_N	I_D/I_N	M_D/M_N	M_M/M_N	RC	kVA_D	J	IM V1
	kW	min^{-1}	%		A	Nm						kgm^2	kg
n=1500min^{-1}													
BOKT 180 M-4	46	1740	88.7	0.83	82	252	5.1	2.2	1.8	10	309	0.21	205
BOKT 180 L-4	60	1740	89.8	0.86	102	329	4.9	2.0	1.6	10	377	0.26	242
BOKT 200 M-4	65	1755	92.3	0.84	110	354	4.9	1.6	1.6	10	413	0.33	305
BOKT 200 L-4	75	1758	91.2	0.83	130	407	5.2	1.8	1.8	10	519	0.38	335
BOKT 225 M-4	90	1765	93.6	0.87	145	487	5.5	1.6	1.8	10	605	0.54	375
BOKT 225 Md-4	100	1768	93.2	0.88	160	540	5.5	1.6	1.8	10	674	0.62	410
BOKT 250 S-4	110	1765	90.4	0.84	190	595	4.3	1.2	1.5	10	616	0.72	470
BOKT 250 M-4	130	1765	92.3	0.84	220	703	4.5	1.3	1.5	10	756	0.87	515
BOKT 250 Md-4	145	1769	92.5	0.84	245	783	5.2	1.6	1.7	10	956	1.02	545
2.BOKT 250 Lk-4	165	1768	93.2	0.86	270	891	5.2	1.6	1.7	10	1074	1.17	590
2.BOKT 250 L-4	175	1770	93.2	0.85	290	944	5.5	1.7	1.8	10	1208	1.32	635
BOKT 280 S-4	185	1769	93.0	0.90	290	999	6.0	1.7	2.0	10	1313	1.35	655
BOKT 280 M-4	235	1768	92.8	0.91	365	1269	5.8	1.7	2.0	10	1614	1.60	720
2.BPOKT 280 M-4	265	1771	93.2	0.91	410	1429	5.9	1.7	2.0	10	1821	1.93	790
2.BPOKT 280 Md-4	315	1770	93.7	0.91	485	1700	5.5	1.5	1.8	10	2037	2.40	865
BPOKT 315 Sd-4	350	1770	94.1	0.90	542	1888	5.7	1.6	2.0	10	2357	2.75	980
BPOKT 315 Md-4	400	1772	94.4	0.89	625	2156	6.3	1.8	2.2	10	2981	3.25	1120
2.BPOKT 315 Mx-4	485	1774	94.5	0.91	740	2611	6.7	1.8	2.3	10	3738	4.25	1250
2.BOKIT 315 Lk-4	565	1780	95.7	0.88	880	3031	5.3	1.3	1.8	10	3578	5.15	1375
2.BOKIT 315 L-4	610	1782	95.8	0.87	960	3269	6.0	1.6	2.0	10	4412	5.70	1445
BPOKT 355 M-4	630	1780	95.1	0.91	955	3380	5.2	1.2	1.7	10	3766	6.40	1850
2.BPOKT 355 Md-4	700	1781	95.7	0.91	1055	3754	5.7	1.2	1.9	10	4570	7.50	1990
2.BPOKT 355 Lk-4	800	1780	91.1	0.91	1266	4292	5.8	1.5	2.0	10	5579	8.20	2120
2.BPOKT 355 L-4	900	1776	95.8	0.86	1433	4840	4.2	1.5	1.4	10	4554	10.60	2260
n=1000min^{-1}													
BOKT 180 M-6	30	1160	85.2	0.84	55	247	4.3	1.1	1.8	10	175	0.22	205
BOKT 180 L-6	35	1162	86.5	0.83	64	288	5.0	1.5	2.3	10	239	0.28	242
BOKT 200 M-6	40	1165	89.3	0.84	70	328	4.3	1.4	1.8	10	228	0.52	320
BOKT 200 L-6	50	1168	87.8	0.83	90	313	4.7	1.5	1.8	10	313	0.62	355
BOKT 225 M-6	60	1171	90.3	0.83	105	489	4.5	1.3	1.6	10	355	0.80	380
BOKT 225 Md-6	70	1173	91.1	0.82	123	570	4.6	1.4	1.6	10	431	0.92	425
2.BOKT 225 L-6	80	1175	91.4	0.82	140	650	5.1	1.5	1.8	10	534	1.10	505
BOKT 250 S-6	95	1170	90.4	0.89	155	775	4.8	1.3	1.7	10	559	1.35	520
BOKT 250 M-6	105	1171	91.0	0.88	172	856	4.6	1.3	1.7	10	604	1.47	580
BOKT 250 Md-6	120	1170	90.7	0.89	195	979	4.4	1.2	1.5	10	652	1.62	615
2.BOKT 250 Lk-6	132	1172	92.1	0.89	210	1076	4.9	1.5	1.9	10	782	1.82	650
2.BOKT 250 L-6	160	1173	91.8	0.88	260	1303	5.4	1.6	2.0	10	1062	2.16	720
BPOKT 280 M-6	190	1172	92.0	0.86	315	1548	5.0	1.4	1.8	10	1192	2.70	760
2.BPOKT 280 Lk-6	240	1174	92.8	0.87	390	1952	5.1	1.4	1.9	10	1499	3.75	880
2.BPOKT 280 L-6	270	1175	92.6	0.87	440	2194	5.3	1.4	2.0	10	1765	4.40	980
2.BPOKT 315 Sd-6	290	1177	92.9	0.90	455	2353	5.4	1.2	2.0	10	1839	5.20	1090
2.BPOKT 315 Md-6	330	1177	94.3	0.90	510	2678	5.4	1.2	2.0	10	2109	5.90	1200
2.BPOKT 315 Mx-6	370	1177	93.6	0.91	570	3002	5.5	1.3	2.0	10	2360	6.50	1270
2.BPOKT 315 Lk-6	410	1180	93.0	0.89	650	3318	6.7	1.6	2.4	10	3224	7.32	1360
2.BPOKT 315 L-6	470	1180	93.9	0.90	730	3804	6.3	1.6	2.3	10	3465	8.27	1470
BPOKT 355 Md-6	510	1182	94.7	0.91	777	4121	5.7	1.0	2.2	10	3357	11.50	1850
2.BPOKT 355 Mx-6	580	1182	95.0	0.91	880	4686	6.3	1.0	2.4	10	4194	13.00	2000
2.BPOKT 355 Lk-6	650	1182	95.3	0.90	994	5252	6.5	1.2	2.6	10	4913	14.80	2120
2.BPOKT 355 L-6	700	1181	95.2	0.91	1060	5660	6.2	1.1	2.4	10	4960	15.60	2220

Electrical Data

for S2, 60 min; 2p=4 and 2p=6; 440V; 60Hz

Protection: IP 23 — S2, 60 min.; 440V; 60Hz — Mounting positions IM 3011 (IM V1)

Type	Rated power at 50 Hz	Rated speed	Effici-ency	Power factor	Rated current	Nominal torque	Starting current /Rated current	Starting torque/ Rated torque	Max. torque /Rated torque	Class of rotor	Apparent starting power	Moment of inertia	Weight
	P_N	N_N	η	cos φ	I_N	C_N	I_D/I_N	M_D/M_N	M_M/M_N	RC	kVA_D	J	IM V1
	kW	min^{-1}	%		A	Nm						kgm^2	kg
n=1500min^{-1}													
BOKT 180 M-4	42	1747	90.3	0.84	73	230	5.6	2.5	2.0	10	309	0.21	205
BOKT 180 L-4	55	1745	90.5	0.86	93	301	5.3	2.3	1.7	10	377	0.26	242
BOKT 200 M-4	60	1763	91.7	0.85	101	325	5.3	1.8	1.8	10	406	0.33	305
BOKT 200 L-4	65	1766	92.3	0.84	110	352	5.9	2.0	2.0	10	491	0.38	335
BOKT 225 M-4	80	1774	92.5	0.86	132	431	6.1	1.8	2.1	10	605	0.54	375
BOKT 225 Md-4	90	1774	93.0	0.87	146	484	6.1	1.8	2.1	10	674	0.62	410
BOKT 250 S-4	100	1766	91.3	0.85	169	541	4.8	1.4	1.6	10	616	0.72	470
BOKT 250 M-4	115	1768	92.5	0.85	192	621	5.2	1.5	1.7	10	756	0.87	515
BOKT 250 Md-4	125	1773	93.0	0.84	210	673	6.0	1.8	2.0	10	956	1.02	545
2.BOKT 250 Lk-4	145	1772	93.4	0.85	240	781	5.9	1.8	2.0	10	1074	1.17	590
2.BOKT 250 L-4	155	1774	93.8	0.85	255	834	6.3	1.9	2.1	10	1208	1.32	635
BOKT 280 S-4	165	1772	93.2	0.90	258	889	6.7	1.8	2.3	10	1313	1.35	655
BOKT 280 M-4	210	1771	93.6	0.90	327	1132	6.5	1.9	2.2	10	1614	1.60	720
2.BPOKT 280 M-4	235	1773	93.9	0.91	361	1266	6.7	1.8	2.2	10	1821	1.93	790
2.BPOKT 280 Md-4	275	1773	94.2	0.91	421	1481	6.4	1.7	2.1	10	2037	2.40	865
BPOKT 315 Sd-4	310	1775	94.4	0.90	479	1668	6.5	1.8	2.3	10	2357	2.75	980
BPOKT 315 Md-4	350	1777	94.7	0.90	539	1881	7.3	2.1	2.6	10	2981	3.25	1120
2.BPOKT 315 Mx-4	430	1779	95.2	0.91	651	2308	7.6	2.1	2.6	10	3738	4.25	1250
2.BOKIT 315 Lk-4	500	1781	95.6	0.88	780	2681	6.0	1.5	2.0	10	3578	5.15	1375
2.BOKIT 315 L-4	540	1783	95.8	0.87	850	2892	6.8	1.8	2.3	10	4412	5.70	1445
BPOKT 355 M-4	565	1782	95.5	0.91	853	3028	5.8	1.3	2.0	10	3766	6.40	1850
2.BPOKT 355 Md-4	625	1785	95.9	0.92	930	3344	6.5	1.4	2.0	10	4570	7.50	1990
2.BPOKT 355 Lk-4	710	1784	96.0	0.91	1066	3801	6.9	1.6	2.3	10	5569	8.20	2120
2.BPOKT 355 L-4	790	1779	96.0	0.87	1241	4241	4.8	1.7	1.6	10	4599	10.60	2260
n=1000min^{-1}													
BOKT 180 M-6	26	1159	87.5	0.83	47	214	5.0	1.2	2.1	10	175	0.22	205
BOKT 180 L-6	30	1164	88.9	0.82	54	246	5.9	1.6	2.5	10	239	0.28	242
BOKT 200 M-6	35	1173	90.1	0.85	60	285	5.1	1.5	1.8	10	229	0.52	320
BOKT 200 L-6	45	1174	90.1	0.84	78	366	5.4	1.6	2.0	10	314	0.62	355
BOKT 225 M-6	55	1175	91.0	0.83	96	447	4.9	1.4	1.7	10	355	0.80	380
BOKT 225 Md-6	65	1176	91.7	0.83	112	528	5.1	1.5	1.8	10	431	0.92	425
2.BOKT 225 L-6	70	1179	91.8	0.82	122	567	5.8	1.8	2.0	10	534	1.10	505
BOKT 250 S-6	85	1176	91.5	0.89	137	690	5.4	1.4	1.9	10	559	1.35	520
BOKT 250 M-6	90	1176	91.5	0.89	145	731	5.5	1.5	2.0	10	604	1.47	580
BOKT 250 Md-6	110	1173	91.6	0.89	177	896	4.9	1.3	1.7	10	652	1.62	615
2.BOKT 250 Lk-6	120	1175	92.1	0.89	192	975	5.1	1.4	1.8	10	741	1.82	650
2.BOKT 250 L-6	145	1177	92.5	0.89	231	1177	5.7	1.6	2.0	10	1005	2.16	720
BPOKT 280 M-6	170	1178	92.7	0.85	283	1378	5.7	1.7	2.1	10	1232	2.70	760
2.BPOKT 280 Lk-6	210	1179	93.4	0.86	343	1701	5.7	1.6	2.2	10	1493	3.75	880
2.BPOKT 280 L-6	240	1177	93.2	0.88	384	1947	5.3	1.4	2.0	10	1537	4.40	980
2.BPOKT 315 Sd-6	260	1182	94.4	0.91	397	2101	6.1	1.4	2.2	10	1839	5.20	1090
2.BPOKT 315 Md-6	295	1183	94.3	0.91	451	2381	6.2	1.4	2.2	10	2109	5.90	1200
2.BPOKT 315 Mx-6	330	1184	94.7	0.89	514	2662	7.0	1.7	2.6	10	2731	6.50	1270
2.BPOKT 315 Lk-6	360	1185	95.1	0.90	552	2901	7.5	1.8	2.8	10	3163	7.32	1360
2.BPOKT 315 L-6	420	1184	95.1	0.90	644	3388	7.1	1.8	2.6	10	3464	8.27	1470
BPOKT 355 Md-6	455	1182	95.0	0.91	691	3676	6.4	1.0	2.5	10	3353	11.50	1850
2.BPOKT 355 Mx-6	515	1184	95.2	0.90	789	4154	7.0	1.2	2.7	10	4175	13.00	2000
2.BPOKT 355 Lk-6	575	1184	95.5	0.90	878	4638	7.4	1.3	3.0	10	4955	14.80	2120
2.BPOKT 355 L-6	625	1183	95.4	0.91	945	5045	7.0	1.2	2.7	10	5002	15.60	2220

Electrical Data

Protection: IP 23 — S2, 90 min.; 440V; 60Hz — Mounting positions IM 3011 (IM V1)

Type	Rated power at 50 Hz	Rated speed	Efficiency	Power factor	Rated current	Nominal torque	Starting current /Rated current	Starting torque/ Rated torque	Max. torque /Rated torque	Class of rotor	Apparent starting power	Moment of inertia	Weight
	P_N	N_N	h	cos φ	I_N	C_N	I_D/I_N	M_D/M_N	M_M/M_N	RC	kVA_D	J	IM V1
	kW	min^{-1}	%		A	Nm						kgm^2	kg
n=1500min^{-1}													
BOKT 180 M-4	37	1751	91.3	0.84	63	202	5.9	2.5	2.1	10	283	0.21	205
BOKT 180 L-4	50	1741	91.0	0.87	83	274	4.7	1.8	1.5	10	274	0.26	242
BOKT 200 M-4	55	1763	92.2	0.86	91	298	5.3	1.7	1.8	10	478	0.33	305
BOKT 200 L-4	60	1766	92.7	0.85	100	324	5.7	1.9	1.9	10	432	0.38	335
BOKT 225 M-4	70	1760	91.5	0.86	117	380	5.1	2.0	1.8	10	456	0.54	375
BOKT 225 Md-4	80	1774	92.9	0.89	127	431	6.0	1.6	2.0	10	571	0.62	410
BOKT 250 S-4	95	1764	91.2	0.86	159	514	4.5	1.2	1.5	10	535	0.72	470
BOKT 250 M-4	105	1767	92.1	0.86	174	567	4.9	1.3	1.6	10	639	0.87	515
BOKT 250 Md-4	115	1773	92.9	0.85	191	619	6.0	1.7	2.0	10	863	1.02	545
2.BOKT 250 Lk-4	132	1770	93.5	0.87	213	712	5.3	1.5	1.8	10	859	1.17	590
2.BOKT 250 L-4	145	1771	93.5	0.87	234	782	5.2	1.5	1.8	10	926	1.32	635
BOKT 280 S-4	155	1768	93.1	0.91	240	837	5.7	1.5	2.0	10	1033	1.35	655
BOKT 280 M-4	195	1766	93.3	0.92	298	1055	5.3	1.4	1.8	10	1206	1.60	720
2.BPOKT 280 M-4	215	1774	93.8	0.92	327	1157	6.2	1.6	2.1	10	1526	1.93	790
2.BPOKT 280 Md-4	255	1771	94.0	0.92	387	1375	5.7	1.4	1.9	10	1665	2.40	865
BPOKT 315 Sd-4	285	1773	94.0	0.91	437	1535	5.9	1.6	2.1	10	1944	2.75	980
BPOKT 315 Md-4	320	1775	94.6	0.91	488	1722	6.4	1.8	2.3	10	2366	3.25	1120
2.BPOKT 315 Mx-4	395	1776	94.8	0.92	594	2124	6.3	1.6	2.2	10	2821	4.25	1250
2.BOKIT 315 Lk-4	460	1778	95.4	0.90	703	2471	5.0	1.2	1.7	10	2689	5.15	1375
2.BOKIT 315 L-4	500	1783	95.8	0.88	778	2678	6.6	1.6	2.3	10	3925	5.70	1445
BPOKT 355 M-4	520	1783	95.7	0.92	775	2785	6.1	1.4	2.2	10	3566	6.40	1850
2.BPOKT 355 Md-4	570	1785	95.9	0.92	848	3050	6.3	1.4	2.1	10	4034	7.50	1990
2.BPOKT 355 Lk-4	650	1784	96.0	0.92	966	3480	6.7	1.5	2.2	10	4918	8.20	2120
2.BPOKT 355 L-4	730	1780	96.1	0.87	1146	3917	5.0	1.7	1.7	10	4349	10.60	2260
n=1000min^{-1}													
BOKT 180 M-6	24	1160	88.9	0.84	42	198	5.0	1.2	2.1	10	160	0.22	205
BOKT 180 L-6	27	1165	90.0	0.83	47	221	5.9	1.6	2.5	10	213	0.28	242
BOKT 200 M-6	35	1171	90.9	0.86	59	285	4.6	1.3	1.7	10	206	0.52	320
BOKT 200 L-6	40	1175	91.7	0.85	67	325	5.4	1.6	2.0	10	274	0.62	355
BOKT 225 M-6	50	1175	92.0	0.84	85	406	4.8	1.3	1.7	10	307	0.80	380
BOKT 225 Md-6	60	1175	92.2	0.84	102	488	4.7	1.3	1.7	10	364	0.92	425
2.BOKT 225 L-6	65	1178	92.3	0.84	110	527	5.2	1.4	1.8	10	436	1.10	505
BOKT 250 S-6	75	1177	92.2	0.89	120	609	5.4	1.4	2.0	10	493	1.35	520
BOKT 250 M-6	80	1178	92.1	0.89	128	649	5.7	1.5	2.1	10	553	1.47	580
BOKT 250 Md-6	100	1173	91.1	0.90	160	814	4.7	1.2	1.7	10	564	1.62	615
2.BOKT 250 Lk-6	110	1176	91.6	0.90	175	893	5.2	1.3	1.9	10	684	1.82	650
2.BOKT 250 L-6	130	1178	92.6	0.89	207	1054	5.9	1.6	2.1	10	918	2.16	720
BPOKT 280 M-6	155	1178	92.7	0.85	258	1257	5.8	1.6	2.2	10	1134	2.70	760
2.BPOKT 280 Lk-6	190	1180	93.5	0.86	310	1538	5.9	1.5	2.2	10	1376	3.75	880
2.BPOKT 280 L-6	220	1178	93.5	0.88	351	1784	5.3	1.3	2.0	10	1420	4.40	980
2.BPOKT 315 Sd-6	235	1183	94.4	0.91	359	1897	6.0	1.2	2.2	10	1634	5.20	1090
2.BPOKT 315 Md-6	270	1182	94.3	0.91	413	2181	5.7	1.2	2.1	10	1778	5.90	1200
2.BPOKT 315 Mx-6	300	1184	94.7	0.91	457	2420	6.8	1.6	2.5	10	2360	6.50	1270
2.BPOKT 315 Lk-6	325	1186	94.9	0.89	505	2617	7.7	1.9	2.9	10	2947	7.32	1360
2.BPOKT 315 L-6	385	1184	95.1	0.90	590	3105	6.9	1.6	2.6	10	3080	8.27	1470
BPOKT 355 Md-6	420	1182	95.1	0.91	637	3393	6.4	1.0	2.5	10	3090	11.50	1850
2.BPOKT 355 Mx-6	475	1184	95.4	0.91	718	3831	7.1	1.2	2.8	10	3863	13.00	2000
2.BPOKT 355 Lk-6	530	1185	95.6	0.90	808	4271	7.5	1.3	3.0	10	4637	14.80	2120
2.BPOKT 355 L-6	570	1182	95.2	0.91	863	4605	7.1	1.1	2.5	10	4649	15.60	2220

Dimensions of the Motors

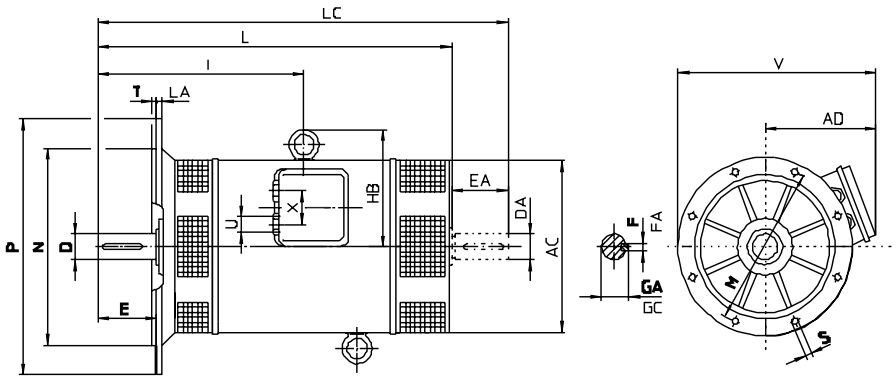

Type		Numb of poles	Flange designa-tion	AC	AD	D	DA	E	EA	F	FA	GA	GC	HB	I	L	LA	LC	M	N	P	S	Num of holes	T	V	U	X
BOKT 180	M	4 ; 6	F 400-I	352	288	55	55	110	110	16	16	59	59	242	415	720	22	830	400	350	450	19	8	5	513		
	L														435	760		870									
BOKT 200	M	4 ; 6	F 500-I	394	317	60	60	140	140	18	18	64	64	262	473.5	801	22	946	500	450	550	19	8	5	592	Pg 36	70
	L														493.5	839		984									
BOKT 225	M;Md	4 ; 6	F 500-I	436	340	65	65	140	140	18	18	69	69	287	515	889	22	1029	500	450	550	19	8	5	615		
BOKT 250	S	4 ; 6	F 600-I	482	362	75	75	140	140	20	20	79.5	79.5	321	532	922	25	1062	600	550	660	24	8	6	692		
	M;Md														550	958		1098									
BOKT 280	S	4	F 600-I	542	424	80	80	170	170	22	22	85	85	364	598	1024	25	1196	600	550	660	24	8	6	754	Pg 42	80
	M														620.5	1069		1241									
BPOKT 280	M	6	F 600-I	542	424	80	80	170	170	22	22	85	85	364	620.5	1069	25	1241	600	550	660	24	8	6			
BPOKT 315	Sd	4	F 740-I	604	462	90	90	170	170	25	25	95	95	395	638	1103	25	1275	740	680	800	24	8	6	862		
	Md														668	1163		1335									
BPOKT 355	M	4	F 740-I	684	574	100	100	210	210	28	28	106	106	479	824	1435	25	1645	740	680	800	24	8	6	974	Pg 48	120
	Md	6																									

All dimensions in millimeters.

The fixing dimensions given in thick figures are obligatory according to the recommendations of IEC. All the other technical data and dimensions of the motors type BOK may undergo some changes during the further development of these motors and therefore they can be considered as obligatory after our confirmation only.

Dimensions of the Motors

Protection: IP23 IM V1 29

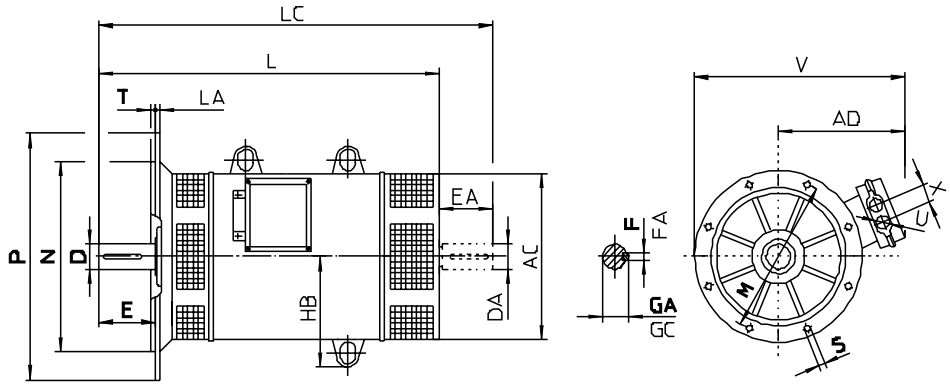

Type		Numb of poles	Flange designation	AC	AD	D	DA	E	EA	F	FA	GA	GC	HB	L	LA	LC	M	N	P	S	Num of holes	T	V	U	X
2.BOKT 225	L	6	F 500-I	436	370	65	65	140	140	20	20	79.5	79.5	287	935	22	1090	500	450	550	19	8	5	645	Pg 36	80
2.BOKT 250	Lk;L	4 ; 6	F 600-I	482	392	75	75	140	140	22	22	85	85	321	1130	25	1315	600	550	660	24	8	6	722		
2.BPOKT 280	M;Md	4	F 600-I	542	504	80	80	170	170	25	25	95	95	364	1229	25	1414	600	550	660	24	8	6	834		
	Lk;L	6													1349		1534									
2.BPOKT 315	Sd	6	F 740-I	604	542	90	90	170	170	28	28	106	106	395	1423	25	1648	740	680	800	24	8	6	942	Pg 48	120
	Mx	4 ; 6													1533		1758									
	Md	6																								
	Lk;L	6													1683		1908									
2.BOKIT 315	Lk;L	4	F 740-I	660	542	90	90	170	170	28	28	106	106	395	1683	25	1908	740	680	800	24	8	6	942		
2.BPOKT 355	Md	4	F-740-I	684	574	100	100	210	210	28	28	116	116	479	1685	25	1910	740	680	800	24	8	6	974	M 72x2	120
	Mx	6																								
	Lk;L	4 ; 6													1785		2010									

All dimensions in millimeters.

The fixing dimensions given in thick figures are obligatory according to the recommendations of IEC. All the other technical data and dimensions of the motors type BOK may undergo some changes during the further development of these motors and therefore they can be considered as obligatory after our confirmation only.

ATB SEVER
Technology in Motion

Enquiry Number:

QUESTIONNAIRE FOR THE OFFER OF ASYNCHRONOUS ELECTRIC MOTORS

Customer:

ITEM:
Qty:

A MOTOR DATA

1. Motor type: Three phase: ☐ Single phase: ☐
2. Rotor type: Squirrel cage: ☐ Slip-ring: ☐
3. Rated output: P_N = ____ kW
4. Rated voltage: U_N ____ V Connect: Star ☐ Delta ☐
5. Rated frequency: f_N = ____ Hz
6. Rated speed: n_N = ____ rpm
7. Insulation class: F ☐ B ☐
8. **Duty type:** S1 S2 S3 S4 S5 S6 S7 S8 S9 S10
   ED % | | | | | | | | | | |
   ____ starts /h ____ min J_{mot} ____ kgm^2
9. Standard: ____ IEC or
10. Cooling method: ____ IC
11. Mounting arrengement: **IM** ____
12. Protection degree: Motor IP: ____ Terminal box IP: ____
13. * Sense of rotation: Left ☐ Right ☐ Both ☐
14. Motor brake: yes ☐ no ☐
    Braking moment: ____ Nm
    Brake voltage: ____ V/Hz ____ V,DC
15. No-load regime? (single phase motor) yes ☐ no ☐
16. Rotor data: U_{2c} = ____ V I_{2n} = ____ A

B DATA ABOUT THE DRIVEN MACHINE

1. Type:
2. Required power:
3. Required speed:
4. Load torque characteristic:
   Constant: ☐ Squared: ☐ or ☐

Speed %:	0	25	50	75	100
Torque Nm:					

5. Moment of inertia: J= ____ kgm^2
6. Running machine special data:

C AMBIENT CONDITIONS

1. Ambient temperature: ____ °C
2. Relative humidity: ____ %
3. Altitude (above sea level): ____ m
4. Specific ambient conditions:

You are kindly requested to provide us with as much data as possible thus enabling us to offer satisfactorily.

D POWER TRANSMISSION AND STARTING CONDITIONS

1. Coupling type:
2. Starting:
3. Number of consecutive startings:

Hot state:		Cold state:	
____	per hour	____	per hour
____	per day	____	per day

E ADDITIONAL REQUESTS FOR MOTOR EXECUTION

1. Overloading from: ____ % P_N
   Duration: ____ min
2. Temperature rise: F ☐ B ☐
3. Request for: vibration level ____ mm/s
   noise level ____ db
4. * Terminal box position: left ☐ right ☐ on top ☐
5. Additional shaft loading sense ____
   axial force ____ radial force ____
6. Converter feed operation: yes ☐ no ☐
   Converter type: ____
   Speed range: from ____ to ____ rpm
7. Sensor category (mark in lower field):

Taho gen.	Encoder	Absolute	Resolver

   Sensor Type: ____
8. Flange size: ____ mm
9. Second shaft end: yes ☐ no ☐
   DA= ____ mm EA= ____ mm
10. Other requests and limits:

F ADDITIONAL EQUIPMENT, SPARE PARTS AND DOCUMENTATION

1. Thermal protection: yes ☐ no ☐
   Type: ____
2. Bearings thermometers yes ☐ no ☐
3. Anti-condesation heaters yes ☐ no ☐
4. Spare parts yes ☐ no ☐
5. Guarantee sheet yes ☐ no ☐
6. Language of instruction list: ____
7. Other requests for packing:

H CUSTOMER

1. Company:
2. Adress:
3. City:
4. Country:
5. Person:
6. Telefon / fax:
7. e-mail:

* OBSERVED FROM DRIVE END

ATB SEVER
Technology in Motion

Number:_____

QUESTIONNAIRE FOR MARINE MOTORS

A GENERAL DATA

1. Customer:	
2. Contract, building number:	
3. Object type (river, sea):	
4. Place of mounting in object:	
5. Purpose of el.motor:	
6. Classification association:	
7. Number of pieces:	

B DATA ABOUT THE EL.MOTOR

1. Type:	
2. Power:	
3. Voltage / Connection:	
4. Frequency:	
5. Number of poles / speed:	
6. Drive type:	
7. Mechanical enclosure:	
8. Shape:	
9. Ambient temperature 40 °C (45 °C):	
10. Insulation class:	

C. CONVERTER FED MOTORS

1. Converter type:	
2. Manufacturer:	
3. Speed range:	min^{-1}
4. Torque-speed characteristics:	

D. SPECIAL REQUESTS:

When ordering please specify: - Country where ship is built, where the motor is to be used:
pump, compressor ... (GD2 or J, amb ...), name of the ship and above / below deck application

E CUSTOMER

1. Company:	
2. Address:	
3. City:	
4. Country:	
5. Person:	
6. Phone / fax:	
7. e-mail:	

NOTE:
If you will not answer to all the questions "ATB SEVER" will take the data from the standardized programme.

ATB SEVER:

_____

Date:

CUSTOMER:

_____

Date:

ATB Group - a global player

a company of **A-TEC** INDUSTRIES AG



















Company locations

Austria

Head office
ATB AUSTRIA ANTRIEBSTECHNIK AG
Hohenstaufengasse 7,
1010 Vienna
Phone: +43 1 90250-0
Fax: +43 1 90250-110
E-Mail: info@atb-motors.com
Http://**www.atb-motors.com**

ATB MOTORENWERKE GmbH
G.-Bauknecht-Straße 1,
A-8724 Spielberg
Phone: +43 3577 757-0
Fax: +43 3577 757-182
E-Mail: info@at.atb-motors.com

ATB TECHNOLOGIES GmbH
Millennium Park 11,
A-6890 Lustenau
Phone: +43 5577 9010 - 0
Fax: +43 5577 9010 - 110
E-Mail: info@at.atb-motors.com

Germany

ATB ANTRIEBSTECHNIK GmbH
Silcherstraße 74,
D-73642 Welzheim
Phone: +49 7182 14 - 1
Fax: +49 7182 14 - 590
E-Mail: info@de.atb-motors.com

ATB MOTORENTECHNIK GmbH
Helgoländer Damm 75,
D-26954 Nordenham
Phone: +49 4731 365 0
Fax: +49 4731 365 159
E-Mail: nordenham@de.atb-motors.com

France
ATB SELNI SAS
6 rue Louise Michel BP 24,
F-58028 Nevers Cedex
Phone: +33 3 86 93 42 00
Fax: +33 3 86 93 42 22
E-Mail: info@fr.atb-motors.com

Great Britain

ATB MORLEY Ltd.
Bradford Road, West Yorkshire,
LS28 6QA Leeds
Phone: +44 113 257 1734
Fax: +44 113 257 0751
E-Mail: sales@uk.atb-motors.com

ATB LAURENCE SCOTT LTD.
PO Box 25 Hardy Road,
NR1 1JD Norwich, Norfolk
Phone: +44 1603 628 333
Fax: +44 1603 619 788
E-Mail: admin@laurence-scott.com

Serbia

ATB SEVER a.d.
Magnetna polja 6,
24000 Subotica
Phone: +381 24 665 100, 665 200
Fax: +381 24 665 105
E-Mail: sever@rs.atb-motors.com

Czech Republic

ATB COMPONENTS S.R.O.
Lihovarská 1335/9,
CZ-71610 Ostrava - Radvanice
Phone: +420 5 962 333 40
Fax: +420 5 962 333 40
E-Mail: atb.bastro@quick.cz

ATB SEVER a.d.
Magnetna polja 6
24 000 Subotica
Serbia
Phone +381 24 665 124
Fax +381 24 665 125
www.atb-motors.com
sever@rs.atb-motors.com